PX2-1731I2
415V, 3Φ Wye
24A, 17.3kVA

Technical Specifications / Engineering Submittals

Raritan Model Number: PX2-1731I2

rev20170831

LINE DRAWING

FEATURES

Energy Metering	Voltage (V), Current (A), Active Power (kW), Real Power (kVA), Energy (kWh), Power Factor
Metering Accuracy	ISO/IEC 62053-21 1%
Metering per Input Line	Yes
Metering per Branch Circuit Breaker	Yes
Metering per Output Receptacle	No
Remote Outlet Switching	No
Environmental Sensor Ready	Yes
Replaceable Controller	No
Compatible Sensors	Temperature, Humidity, Air Flow, Differential Pressure, Water Leak, and Contact Closure
Networking	(10/100 BaseT) Ethernet port. Optional WiFi (802.11a/b/g/n)
Remote Management	HTTP(s); SSH; Telnet; RS-232 (Serial); Power IQ; SNMP version v2/v3; SMTP; JSON-RPC
Cascading	Yes, Max 8 PDUs can be daisy chained using USB connection
Onboard Display	3-digit LED user-selectable display : Voltage, current, or active power (per line or per breaker); Auto-flip orientation
Embedded Processor	ARM9 400MHZ (Atmel SAM9G20), 16MB NOR Flash, 64MB SDRAM

Raritan
A brand of legrand

Technical Specifications / Engineering Submittals

Raritan Model Number: PX2-1731I2

rev20170831

INPUT

Input Plug	IEC 60309 3P+N+E 6h 32A (4P5W)
Cord Length	3 meters (9.84 feet) standard
Cord Entry	Bottom-front feed
Cable Type	IP44("splashproof")
Number of Power Cords	1
Maximum Input Current	32A
Nominal Input Voltage	415V 3 phase
Rated Input Voltage	360 - 415V 3 phase
Input Frequency	50/60Hz
Power Capacity	15.0kVA at 360V, 17.3kVA at 415V

OUTPUT

Nominal Output Voltage	208V
Rated Output Voltage	208 - 240V
Receptacles (Output Connections)	(24) IEC320 C13, 12A (12) IEC320 C19, 16A
Securelock Support	Yes
Cord Retention	Yes
Overload Protection	(6) Airpax LELBX1-20

PHYSICAL

Color	Black powder coat (custom colors available)
Unit Dimensions (WxDxH)	2.1" x 2.1" x 70.1" ; 52mm x 53mm x 1780mm
Unit Weight	9 kg
Shipping Weight	12 kg
Shipping Dimensions (WxDxH)	11.22" x 4.53" x 75.39" ; 285mm x 115mm x 1915mm
Mounting	RACK-KIT-PX2-1K-ZU

Technical Specifications / Engineering Submittals

Raritan Model Number: PX2-1731I2

rev20170831

ENVIRONMENTAL

Operating Temperature	60°C
Operating Relative Humidity	85%
Operating Elevation	0-10000ft

CONFORMANCE

Regulatory Approvals	UL Listed, Canada ICES-003, Part 15 Class A of the FCC rules, RoHS compliant
Warranty	Standard 2 years manufacturer warranty

Technical Specifications / Engineering Submittals

Raritan Model Number: PX2-1731I2

rev20170831

CONTROL PANEL

Dimension: 188mm x 43mm

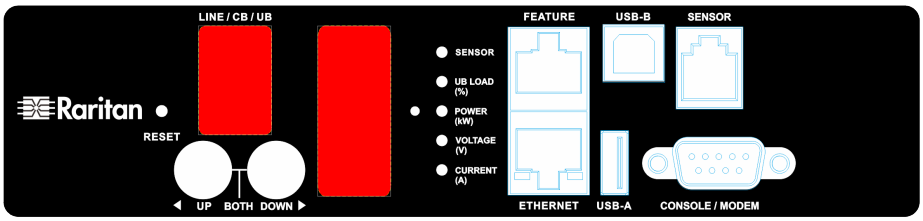

Technical Specifications / Engineering Submittals

Raritan Model Number: PX2-1731I2

rev20170831

ELECTRICAL (ONE LINE) DIAGRAM

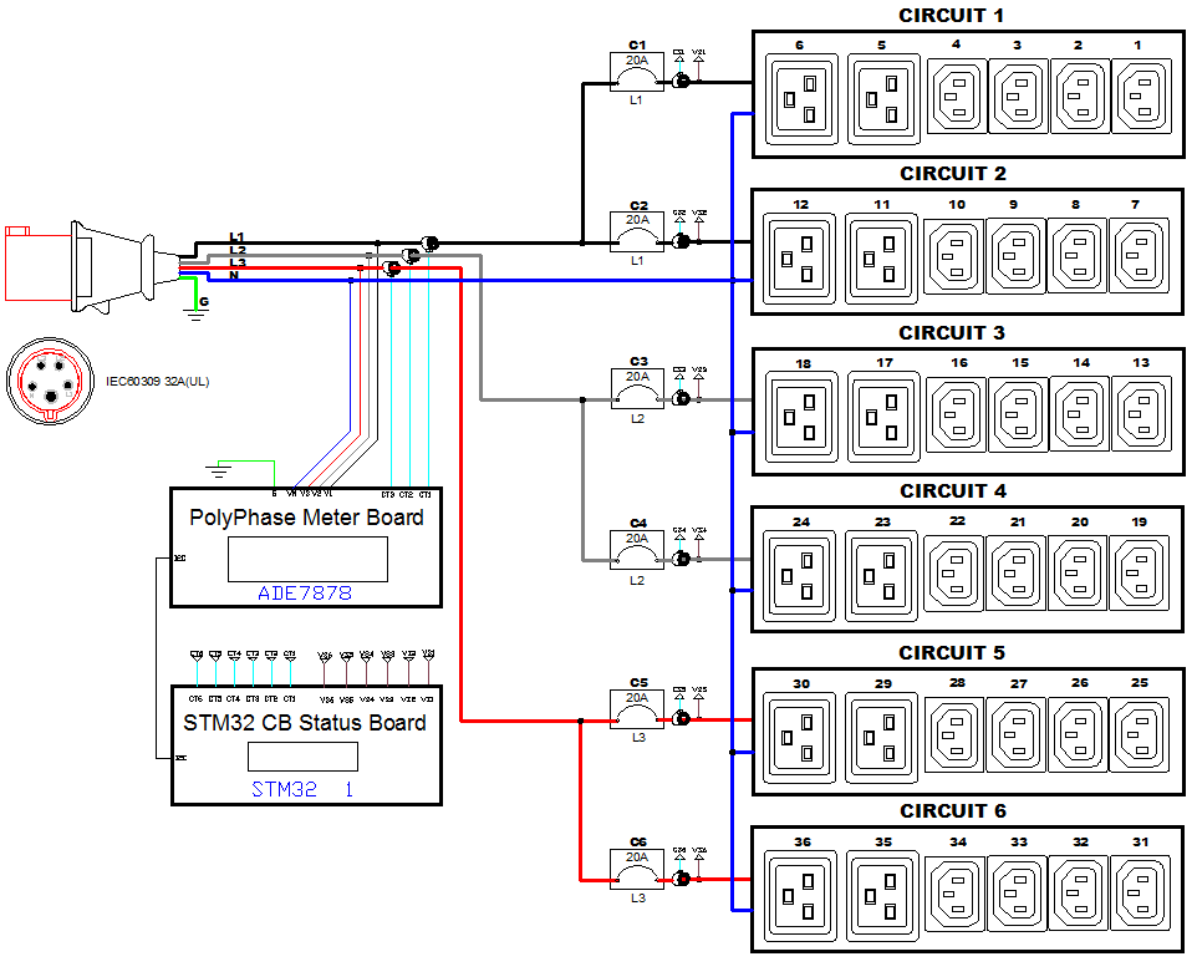

Technical Specifications / Engineering Submittals

Raritan Model Number: PX2-1731I2

rev20170831

MECHANICAL DIAGRAM

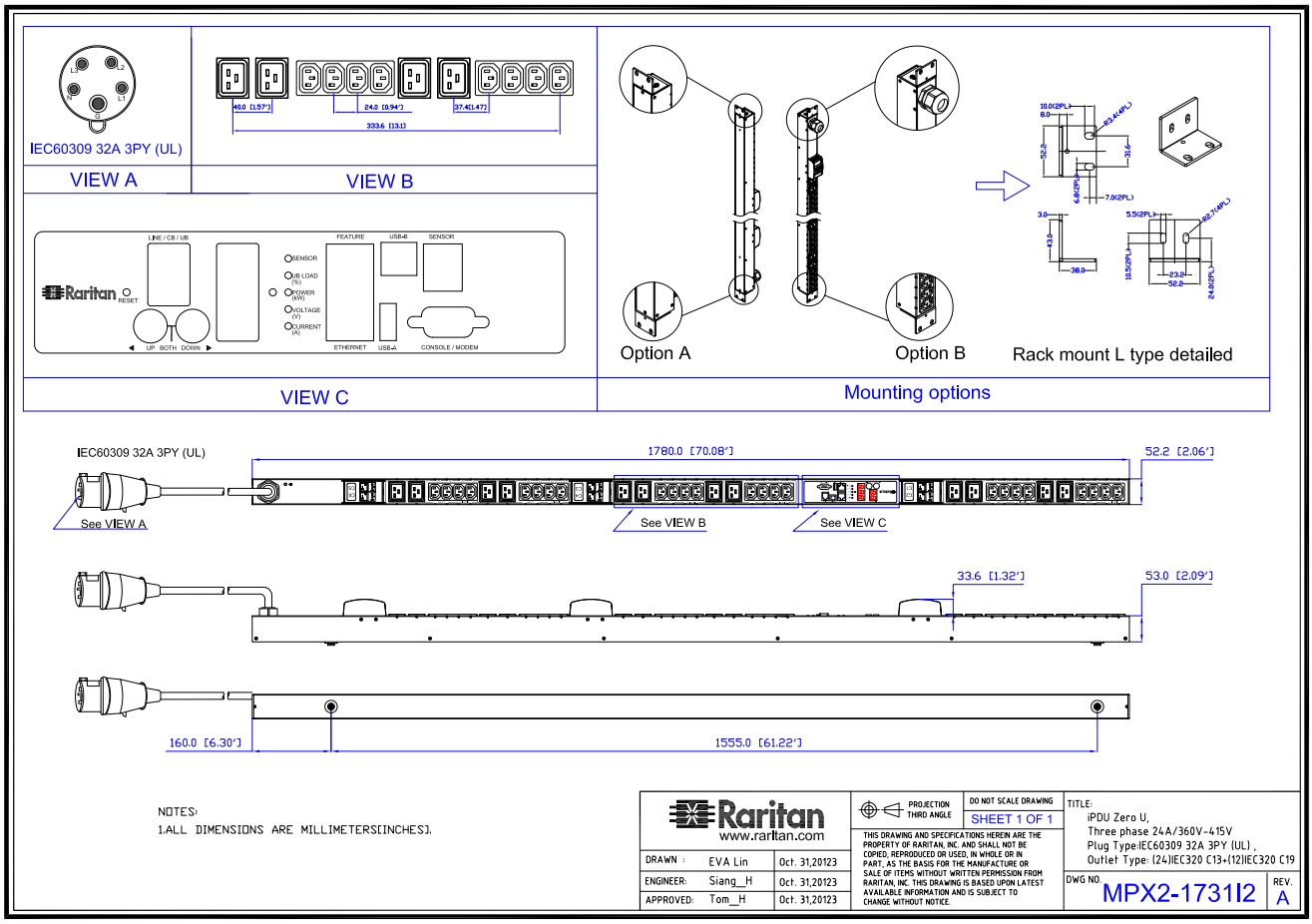

Technical Specifications / Engineering Submittals

Raritan Model Number: PX2-1731I2

rev20170831

TRIP CURVE

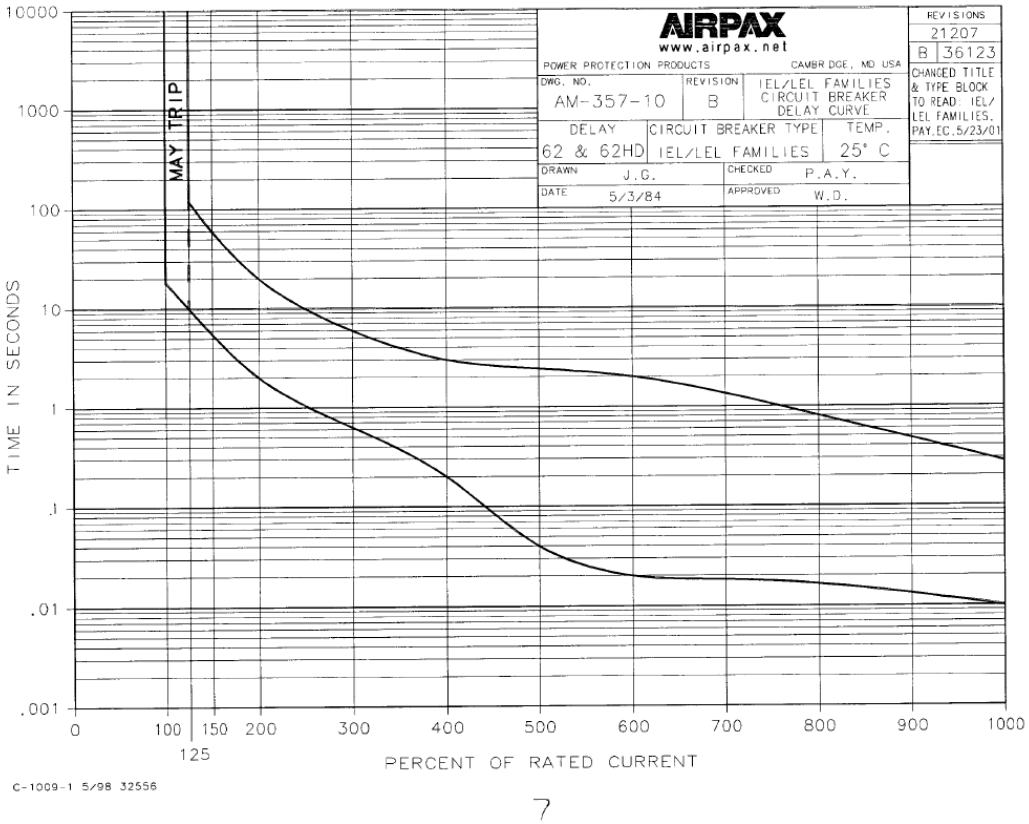

This file generated on: Thu, August 31, 2017 - 04:33:38