PX2-2627
415V, 3Φ Wye
16A, 11.5kVA

Technical Specifications / Engineering Submittals

Raritan Model Number: PX2-2627

rev20200701

LINE DRAWING

FEATURES

Energy Metering	Voltage (V), Current (A), Active Power (kW), Real Power (kVA), Energy (kWh), Power Factor
Metering Accuracy	ISO/IEC 62053-21 1%
Metering per Input Line	Yes
Metering per Branch Circuit Breaker	No
Metering per Output Receptacle	No
Remote Outlet Switching	Yes
Environmental Sensor Ready	Yes
Replaceable Controller	No
Compatible Sensors	Temperature, Humidity, Air Flow, Differential Pressure, Water Leak, and Contact Closure
Networking	(10/100 BaseT) Ethernet port. Optional WiFi (802.11a/b/g/n)
Remote Management	HTTP(s); SSH; Telnet; RS-232 (Serial); Power IQ; SNMP version v2/v3; SMTP; JSON-RPC
Cascading	Yes, Max 8 PDUs can be daisy chained using USB connection
Onboard Display	3-digit LED user-selectable display : Voltage, current, or active power (per line); Auto-flip orientation
Embedded Processor	ARM 9 400MHZ (Atmel SAM9G20), 16MB NOR Flash, 64MB SDRAM

Raritan
A brand of legrand

Technical Specifications / Engineering Submittals

Raritan Model Number: PX2-2627

rev20200701

INPUT

Input Plug	NEMA L22-20P (4P5W)
Cord Length	3 meters (9.84 feet) standard
Cord Entry	Bottom-front feed
Cable Type	IP44("splashproof")
Number of Power Cords	1
Maximum Input Current	20A
Nominal Input Voltage	415V 3 phase
Rated Input Voltage	360 - 415V 3 phase
Input Frequency	50/60Hz
Power Capacity	10.0kVA at 360V, 11.5kVA at 415V

OUTPUT

Nominal Output Voltage	208V
Rated Output Voltage	208 - 240V
Receptacles (Output Connections)	(21) IEC320 C13, 12A (3) IEC320 C19, 16A
Securelock Support	Yes
Cord Retention	Yes
Overload Protection	N/A

PHYSICAL

Color	Black powder coat (custom colors available)
Unit Dimensions (WxDxH)	2.1" x 2.6" x 60.6" ; 52mm x 65mm x 1539mm
Unit Weight	4 kg
Shipping Weight	6 kg
Shipping Dimensions (WxDxH)	11.02" x 4.53" x 65.16" ; 280mm x 115mm x 1655mm
Mounting	G2-RACK-FOR-ZU

Technical Specifications / Engineering Submittals

Raritan Model Number: PX2-2627

rev20200701

ENVIRONMENTAL

Operating Temperature	60°C
Operating Relative Humidity	85%
Operating Elevation	0-6000ft
Storage Temperature	-25 to 65°C
Storage Humidity	0-100%
Storage Elevation	0-10000ft

CONFORMANCE

Regulatory Approvals	UL Listed, Canada ICES-003, Part 15 Class A of the FCC rules, RoHS compliant
Warranty	Standard 2 years manufacturer warranty (Extended warranty available for purchase)

Technical Specifications / Engineering Submittals

Raritan Model Number: PX2-2627

rev20200701

CONTROL PANEL

Dimension: 188mm x 43mm

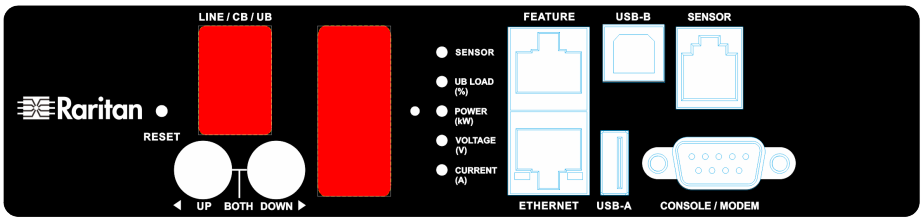

Technical Specifications / Engineering Submittals

Raritan Model Number: PX2-2627

rev20200701

ELECTRICAL (ONE LINE) DIAGRAM

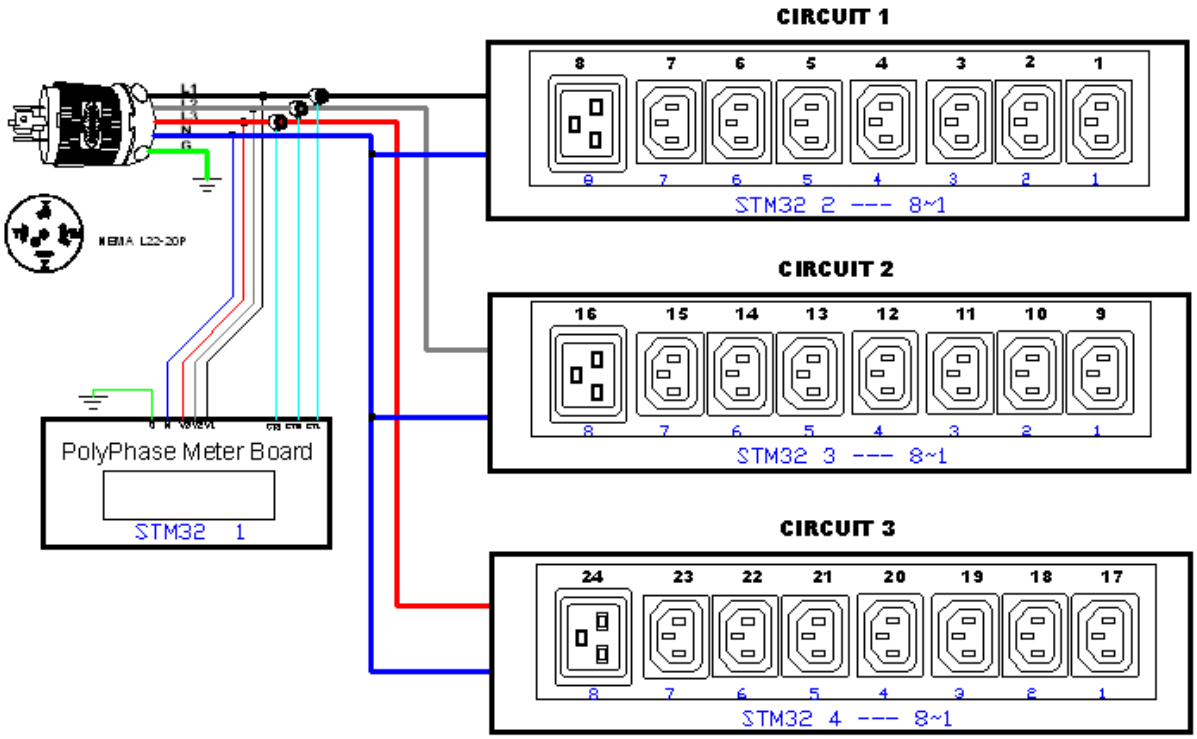

Technical Specifications / Engineering Submittals

Raritan Model Number: PX2-2627

rev20200701

MECHANICAL DIAGRAM

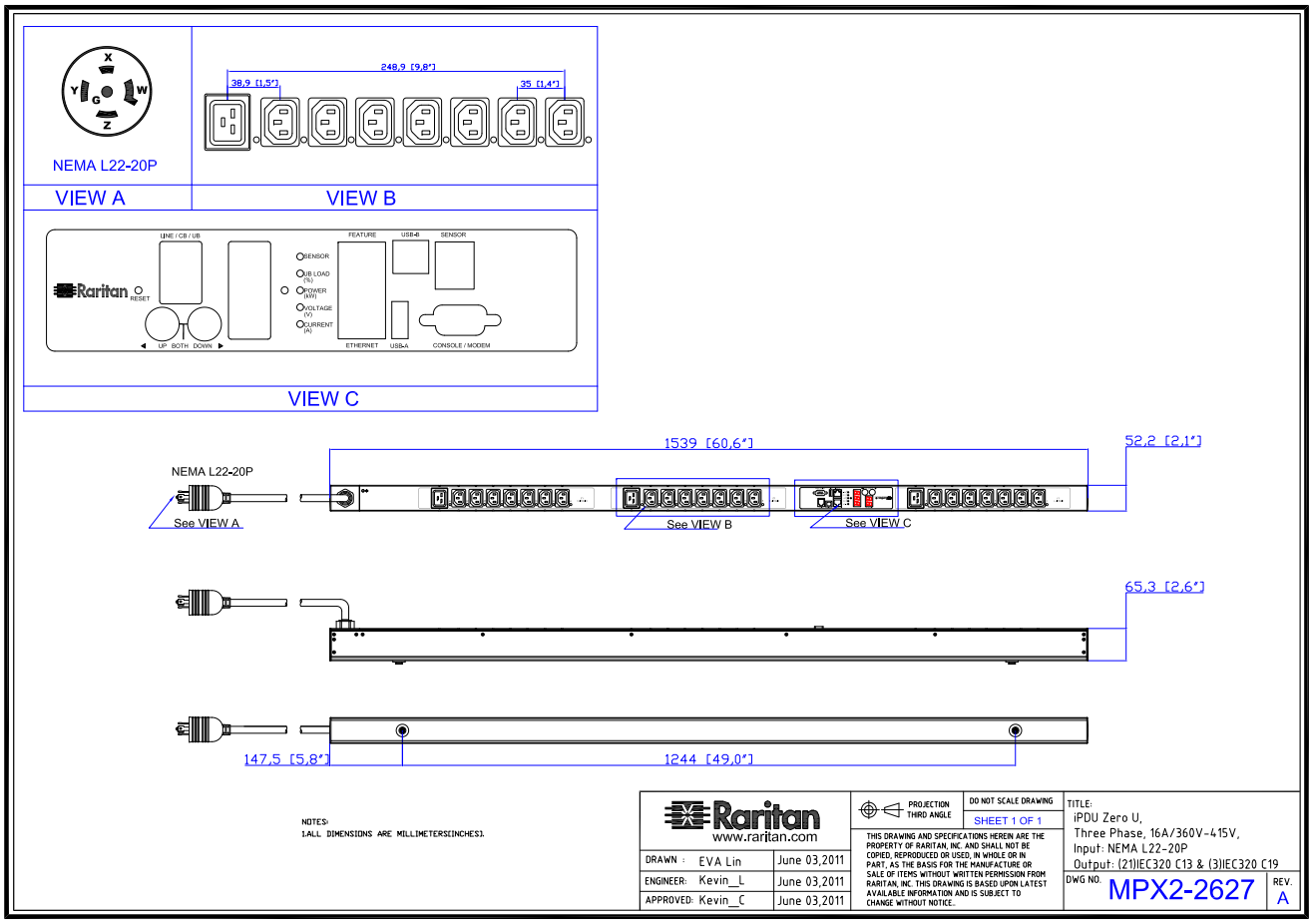

Technical Specifications / Engineering Submittals

Raritan Model Number: PX2-2627

rev20200701

Mounting Diagram (G2-RACK-FOR-ZU)

250-70-0104-00

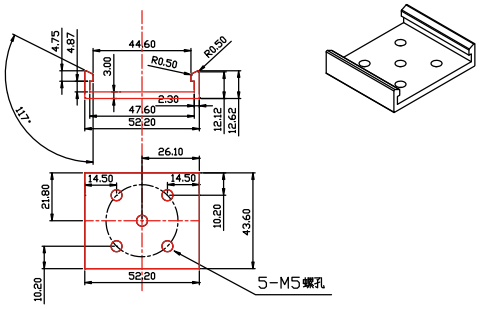

250-80-0011-00

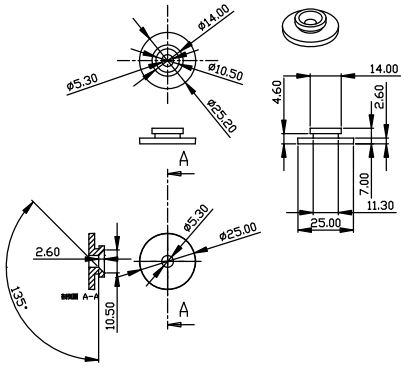

250-70-0007-00

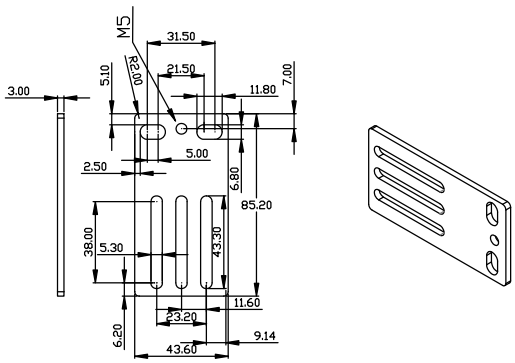

250-70-0093-00

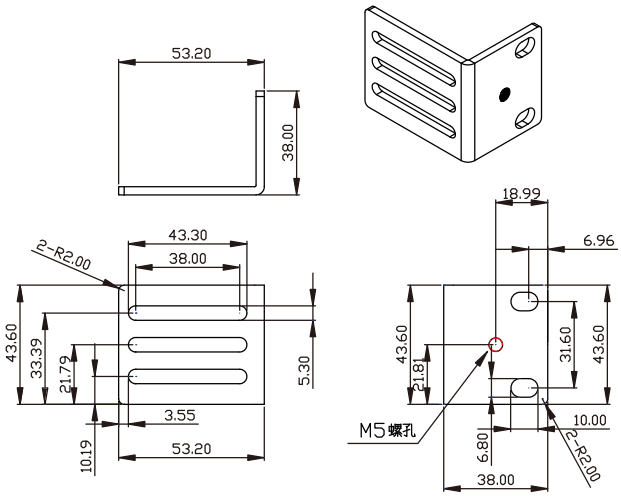

Technical Specifications / Engineering Submittals

Raritan Model Number: PX2-2627

rev20200701

TRIP CURVE

This file generated on: Wed, July 01, 2020 - 06:59:04