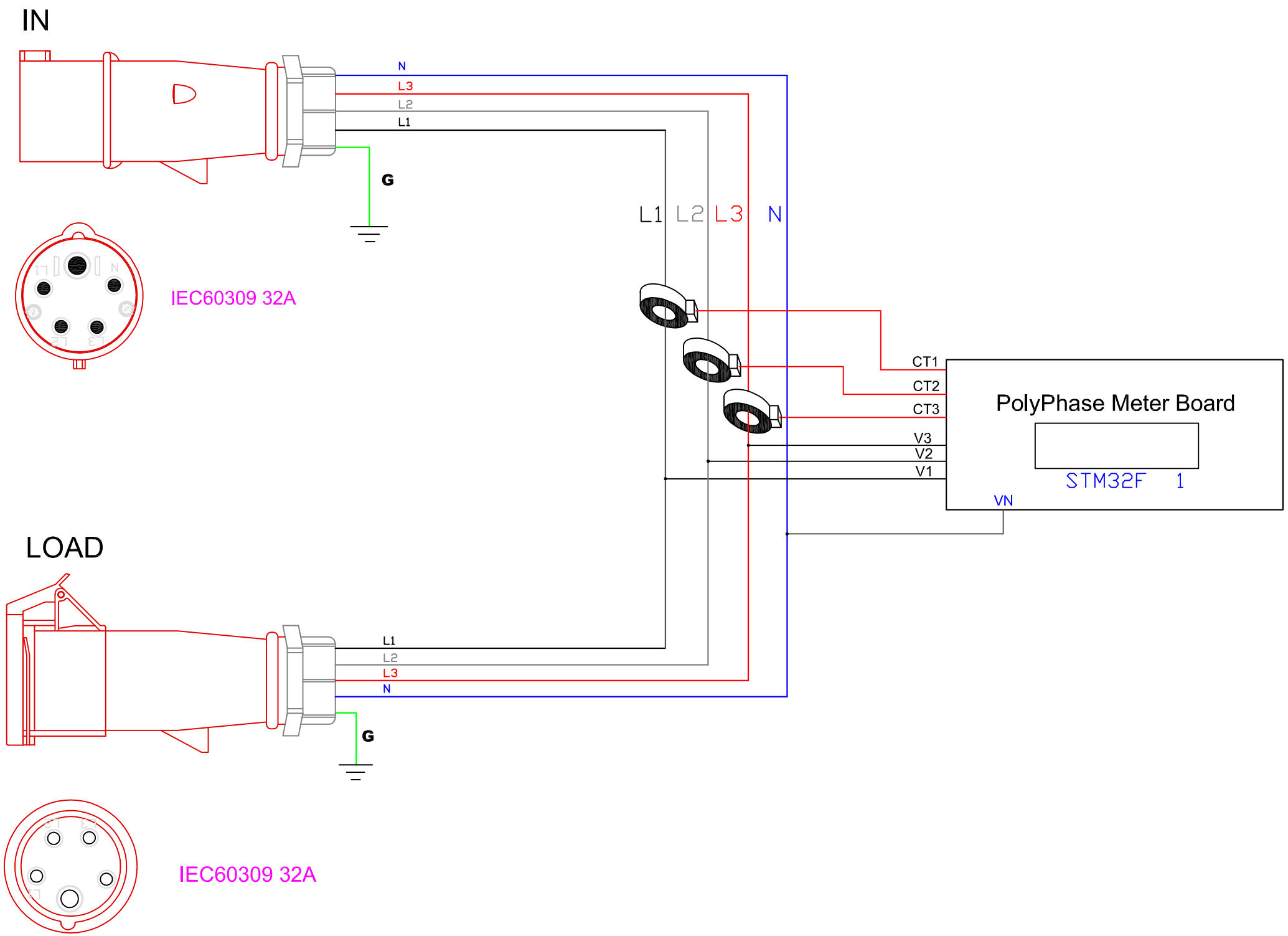


Raritan
www.raritan.com

| | | |
|---|---|---|
| DRAWN : Tomy | JAN/04/2011 | |
| ENGINEER: Kevin.Chu | JAN/04/2011 | |
| APPROVED: Alex.Lee | JAN/04/2011 | |

PROJECTION THIRD ANGLE

DO NOT SCALE DRAWING

SHEET 1 OF 1

THIS DRAWING AND SPECIFICATIONS HEREIN ARE THE PROPERTY OF RARITAN, INC. AND SHALL NOT BE COPIED, REPRODUCED OR USED, IN WHOLE OR IN PART, AS THE BASIS FOR THE MANUFACTURE OR SALE OF ITEMS WITHOUT WRITTEN PERMISSION FROM RARITAN, INC. THIS DRAWING IS BASED UPON LATEST AVAILABLE INFORMATION AND IS SUBJECT TO CHANGE WITHOUT NOTICE..

TITLE:
iPDU 1U, Metered only, 3 phase, Wye
32A / 380-415V
Input : IEC60309 32A Plug
Output : IEC60309 32A Receptacle

DWG NO. TPX2-3172

REV. A