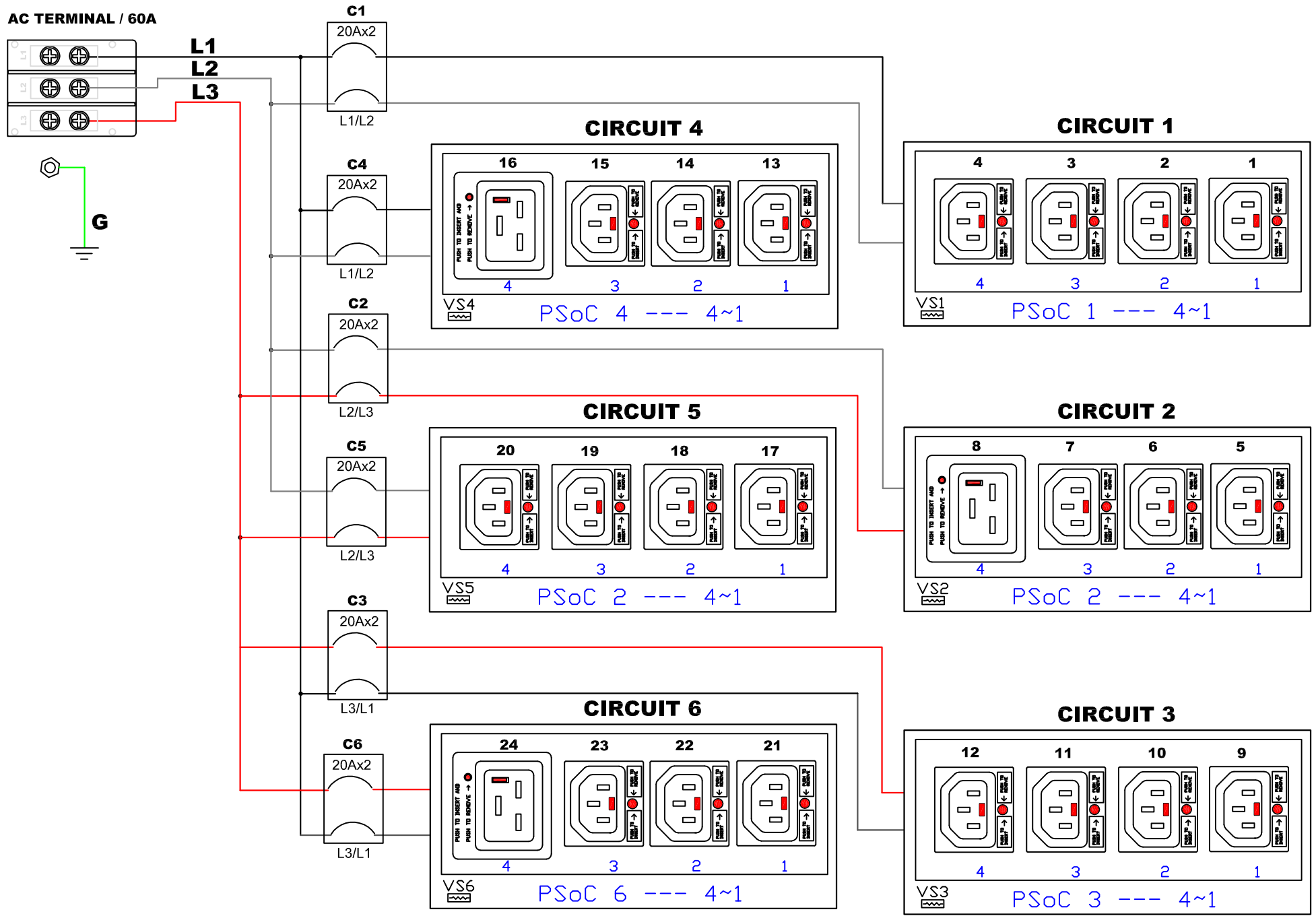


Raritan
www.raritan.com

| | | |
|---|---|---|
| DRAWN : Tomy | FEB/05/2013 | |
| ENGINEER: Tomy | FEB/05/2013 | |
| APPROVED: Alex.Lee | FEB/05/2013 | |

PROJECTION THIRD ANGLE

DO NOT SCALE DRAWING

SHEET 1 OF 1

THIS DRAWING AND SPECIFICATIONS HEREIN ARE THE PROPERTY OF RARITAN, INC. AND SHALL NOT BE COPIED, REPRODUCED OR USED, IN WHOLE OR IN PART, AS THE BASIS FOR THE MANUFACTURE OR SALE OF ITEMS WITHOUT WRITTEN PERMISSION FROM RARITAN, INC. THIS DRAWING IS BASED UPON LATEST AVAILABLE INFORMATION AND IS SUBJECT TO CHANGE WITHOUT NOTICE..

TITLE:
iPDU 0U, Metered only, Three phase Delta
48A / 208-240V
Input : IEC60309 63A/60A(UL)
Output : (21) C13 Locking, (3) C19 Locking

DWG NO. TPX2-4770X-E2V2

REV. B