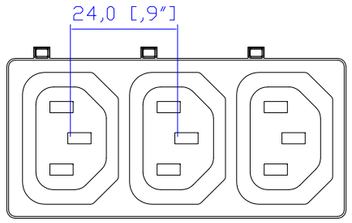

VIEW A

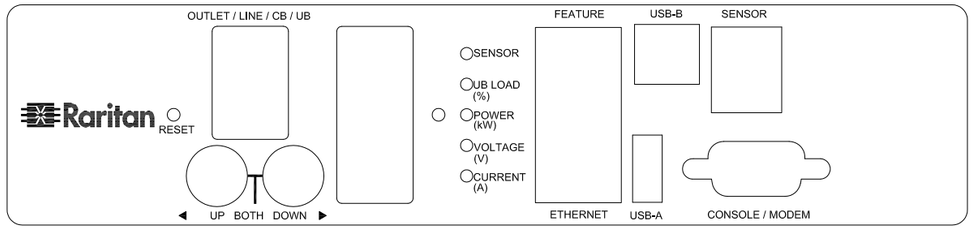

VIEW B

Option 1.

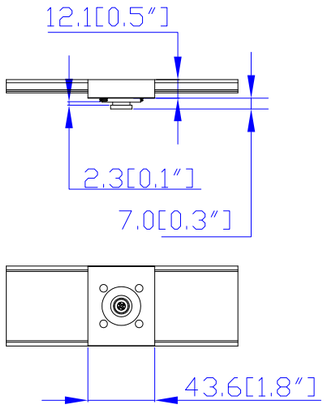

Option 2.

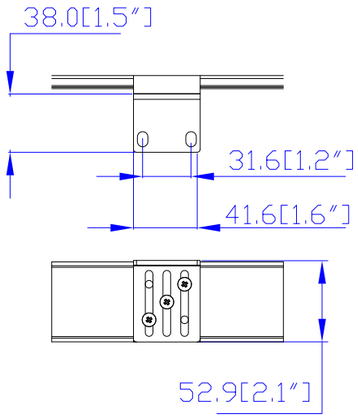

Option 3.

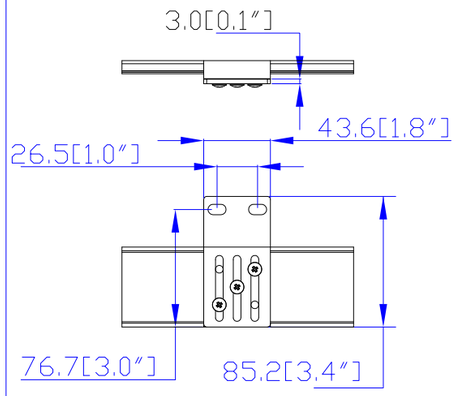

VIEW C

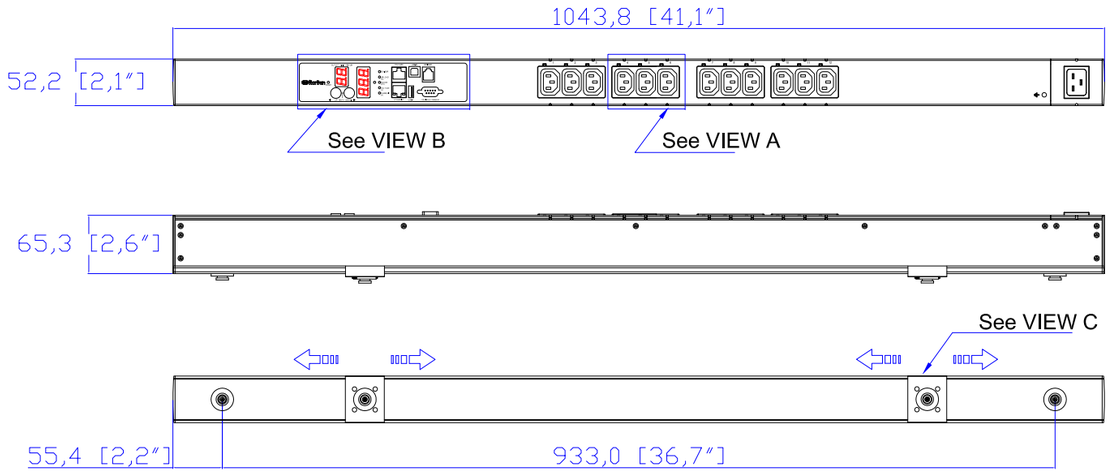

IEC 320 C19 16A Cord

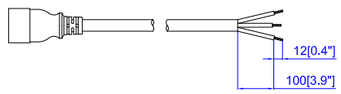

NOTES:

1.ALL DIMENSIONS ARE MILLIMETERS[INCHES].

Raritan www.raritan.com		PROJECTION THIRD ANGLE	DO NOT SCALE DRAWING
			SHEET 1 OF 1
DRAWN :	EVA LIN	Jun. 19, 2014	THIS DRAWING AND SPECIFICATIONS HEREIN ARE THE PROPERTY OF RARITAN, INC. AND SHALL NOT BE COPIED, REPRODUCED OR USED, IN WHOLE OR IN PART, AS THE BASIS FOR THE MANUFACTURE OR SALE OF ITEMS WITHOUT WRITTEN PERMISSION FROM RARITAN, INC. THIS DRAWING IS BASED UPON LATEST AVAILABLE INFORMATION AND IS SUBJECT TO CHANGE WITHOUT NOTICE.
ENGINEER:	Siang_H	Jun. 19, 2014	
APPROVED:	Tom_H	Jun. 19, 2014	

TITLE: iPDU Zero U,
Single Phase, 16A/200V-240V,
Inlet Type : IEC320 C20 ,
Plug Type:16A Cord
OutputType: (12)IEC320 C13

DWG NO. MPX2-5260N & MPX2-4260N

REV. A