PX2-5939R
208V, 3Φ Delta
40A, 14.4kVA

Technical Specifications / Engineering Submittals

Raritan Model Number: PX2-5939R

rev20180322

LINE DRAWING

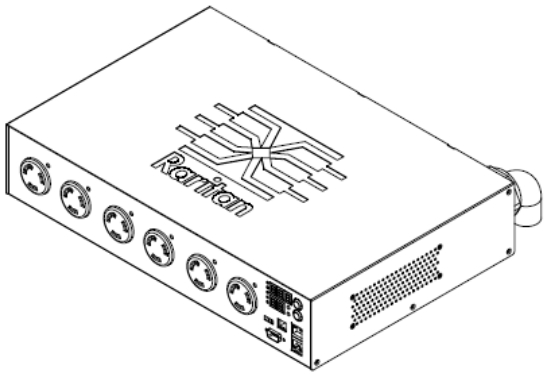

FEATURES

Energy Metering	Voltage (V), Current (A), Active Power (kW), Real Power (kVA), Energy (kWh), Power Factor
Metering Accuracy	ISO/IEC 62053-21 1%
Metering per Input Line	Yes
Metering per Branch Circuit Breaker	Yes
Metering per Output Receptacle	Yes
Remote Outlet Switching	Yes
Environmental Sensor Ready	Yes
Replaceable Controller	No
Compatible Sensors	Temperature, Humidity, Air Flow, Differential Pressure, Water Leak, and Contact Closure
Networking	(10/100 BaseT) Ethernet port. Optional WiFi (802.11a/b/g/n)
Remote Management	HTTP(s); SSH; Telnet; RS-232 (Serial); Power IQ; SNMP version v2/v3; SMTP; JSON-RPC
Cascading	Yes, Max 8 PDUs can be daisy chained using USB connection
Onboard Display	3-digit LED user-selectable display : Voltage, current, or active power (per line, per breaker or per receptacle / outlet)
Embedded Processor	ARM9 400MHZ (Atmel SAM9G20), 16MB NOR Flash, 64MB SDRAM

Raritan
A brand of legrand

Technical Specifications / Engineering Submittals

Raritan Model Number: PX2-5939R

rev20180322

INPUT

Input Plug	CS8365C (3P4W)
Cord Length	3 meters (9.84 feet) standard
Cord Entry	Rear feed
Cable Type	IP20
Number of Power Cords	1
Maximum Input Current	50A
Nominal Input Voltage	208V 3 phase
Rated Input Voltage	208 - 240V 3 phase
Input Frequency	50/60Hz
Power Capacity	14.4kVA at 208V, 16.6kVA at 240V

OUTPUT

Nominal Output Voltage	208V
Rated Output Voltage	208 - 240V
Receptacles (Output Connections)	(6) NEMA L6-20R, 16A
Securelock Support	No
Cord Retention	No
Overload Protection	(6) LEGBX66-20

PHYSICAL

Color	Black powder coat (custom colors available)
Unit Dimensions (WxDxH)	17.3" x 11.5" x 3.5" ; 440mm x 293mm x 88mm
Unit Weight	11.1 kg
Shipping Weight	14.8 kg
Shipping Dimensions (WxDxH)	22.05" x 21.73" x 11.18" ; 560mm x 552mm x 284mm
Mounting	RACK-KIT-PX-2U

Technical Specifications / Engineering Submittals

Raritan Model Number: PX2-5939R

rev20180322

ENVIRONMENTAL

Operating Temperature	60°C
Operating Relative Humidity	85%
Operating Elevation	0-10000ft

CONFORMANCE

Regulatory Approvals	UL Listed, Canada ICES-003, Part 15 Class A of the FCC rules, RoHS compliant
Warranty	Standard 2 years manufacturer warranty

Technical Specifications / Engineering Submittals

Raritan Model Number: PX2-5939R

rev20180322

CONTROL PANEL

Dimension: 82mm x 72.85mm

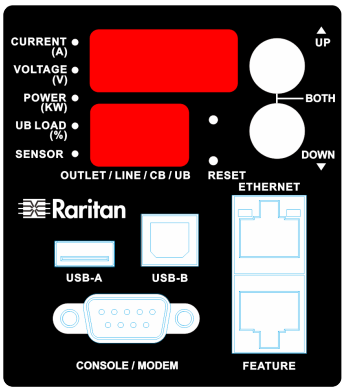

Technical Specifications / Engineering Submittals

Raritan Model Number: PX2-5939R

rev20180322

ELECTRICAL (ONE LINE) DIAGRAM

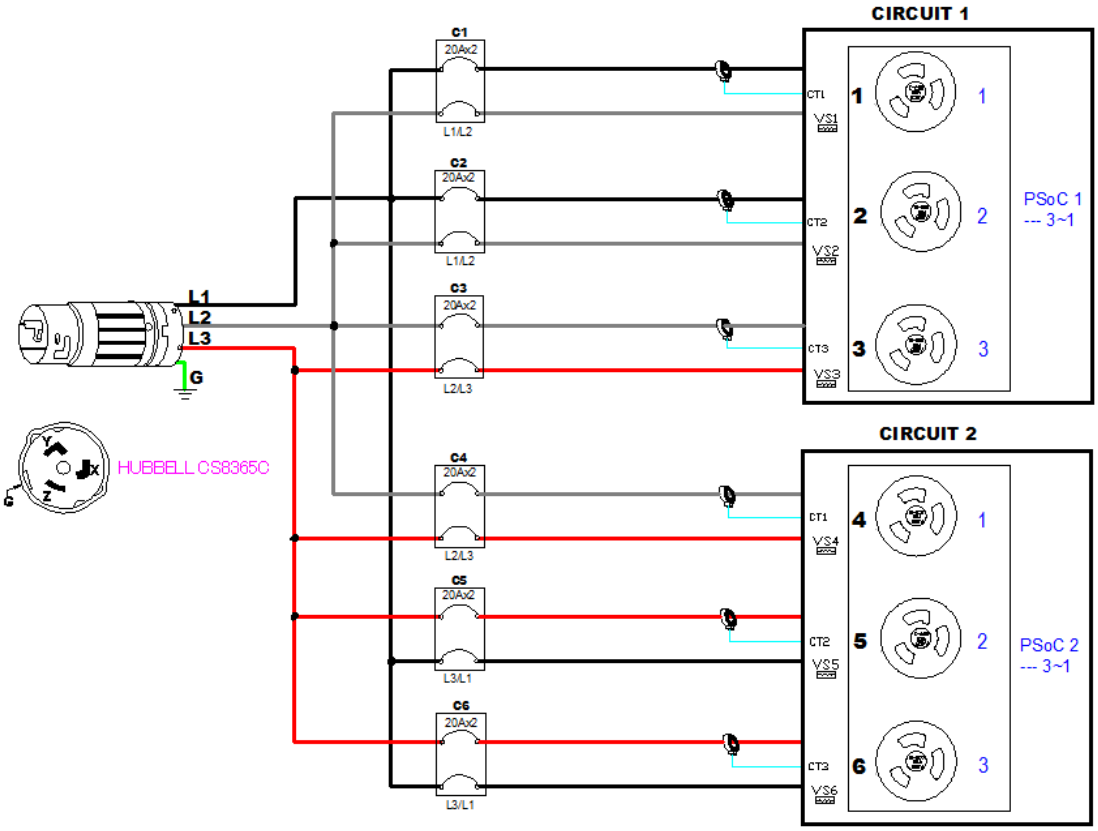

Technical Specifications / Engineering Submittals

Raritan Model Number: PX2-5939R

rev20180322

MECHANICAL DIAGRAM

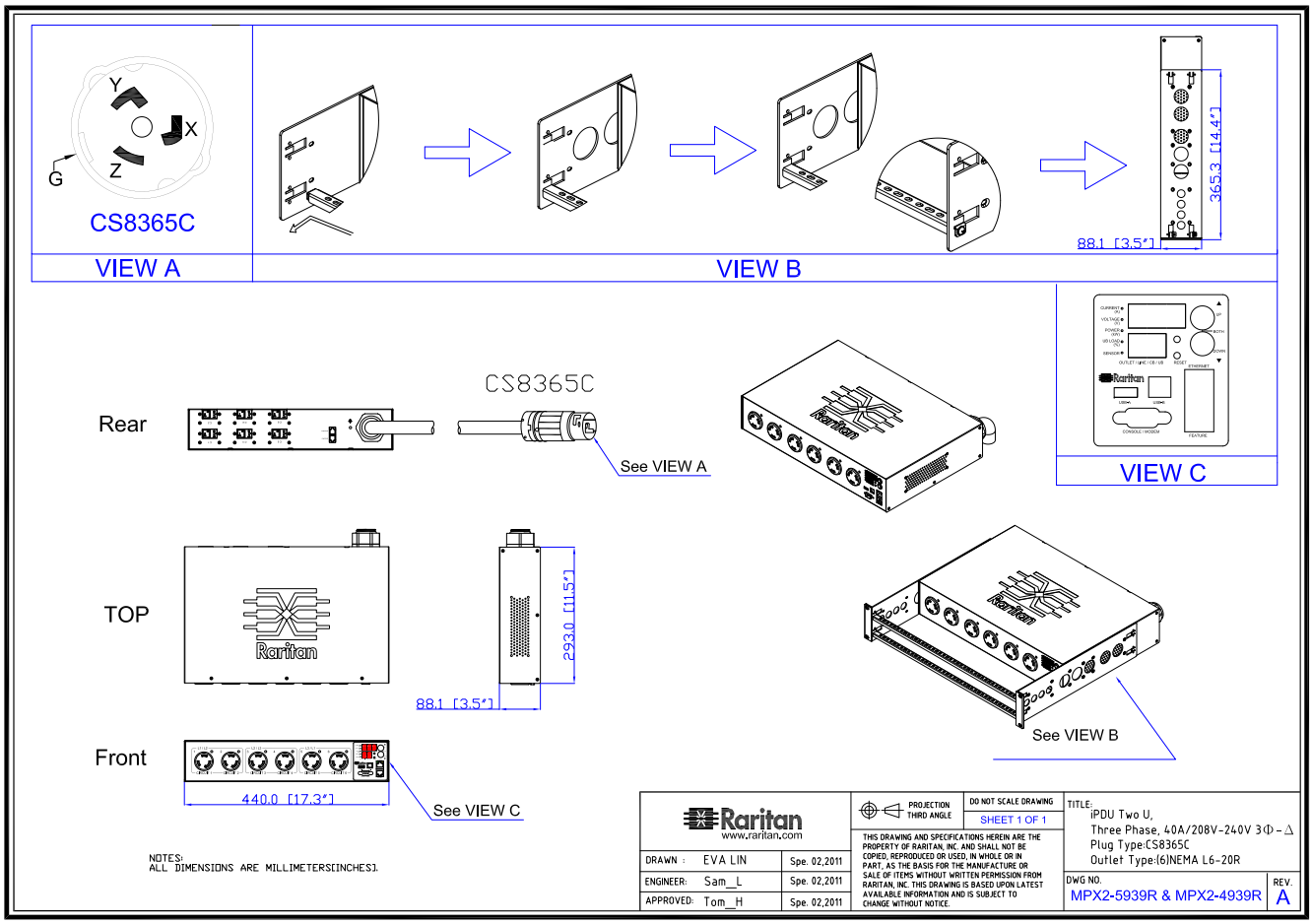

Technical Specifications / Engineering Submittals

Raritan Model Number: PX2-5939R

rev20180322

TRIP CURVE

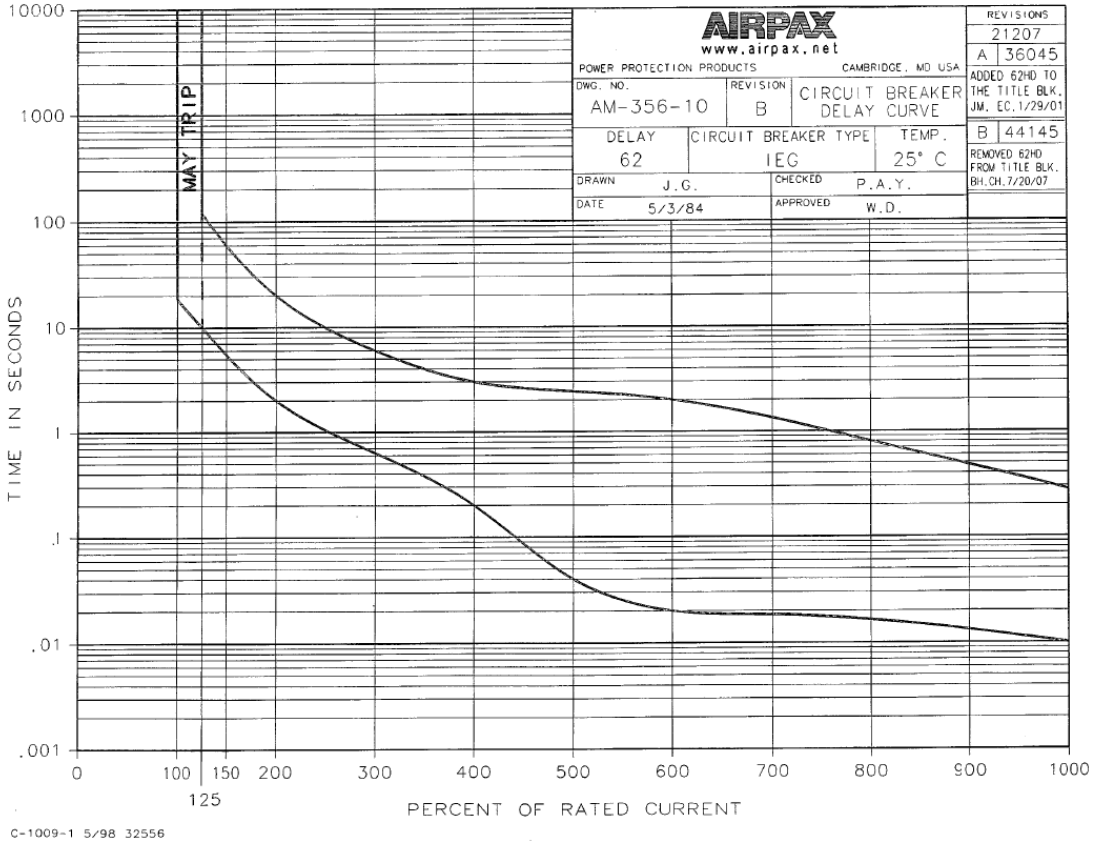

This file generated on: Thu, March 22, 2018 - 06:02:01