PX3-1027XV-O1V2
208V, 3Φ Wye
24A, 8.6kVA

Technical Specifications / Engineering Submittals

Raritan Model Number: PX3-1027XV-O1V2

rev20230817

LINE DRAWING

FEATURES

Energy Metering	Voltage (V), Current (A), Active Power (kW), Real Power (kVA), Energy (kWh), Power Factor
Metering Accuracy	ISO/IEC 62053-21 1% (see page 3 for details)
Metering per Input Line	Yes
Metering per Branch Circuit Breaker	Yes
Metering per Output Receptacle	No
Remote Outlet Switching	No
Environmental Sensor Ready	Yes
Replaceable Controller	Yes
Compatible Sensors	Temperature, Humidity, Air Flow, Differential Pressure, Water Leak, and Contact Closure
Networking	Gigabit (10/100/1000 BaseT) Ethernet port; secondary, redundant (10/100/1000 BaseT) Ethernet port. Optional WiFi (802.11a/b/g/n)
Remote Management	HTTP(s); SSH; Telnet; RS-232 (Serial); Power IQ; SNMP version v2/v3; SMTP; JSON-RPC; Modbus over TCP
Cascading	Yes, Max 16 PDUs can be daisy chained using a single Ethernet or USB connection
Onboard Display	Color, matrix LCD display : Voltage, current, or active power (per line or per breaker); Alarms; Configuration information (name, ratings, IP / Networking information); Auto-flip orientation
Embedded Processor	ARM Cortex A5 536MHZ (Atmel A5D35A), 16MB SPI Flash, 64MB DDR2 RAM

Raritan
A brand of legrand

Technical Specifications / Engineering Submittals

Raritan Model Number: PX3-1027XV-O1V2

rev20230817

INPUT

Input Plug	AC Terminal (N/A)
Cord Length	N/A
Cord Entry	Bottom-bottom feed
Cable Type	
Number of Power Cords	N/A
Maximum Input Current	24A
Nominal Input Voltage	208V 3 phase
Rated Input Voltage	190 - 208V 3 phase
Input Frequency	50/60Hz
Power Capacity	7.9kVA at 190V, 8.6kVA at 208V

OUTPUT

Nominal Output Voltage	120V
Rated Output Voltage	110 - 120V
Receptacles (Output Connections)	(18) IEC320 C13, 12A (6) IEC320 C19, 16A
Securelock Support	Yes
Cord Retention	Yes
Overload Protection	(6) LEJBXA6-20

PHYSICAL

Color	Black powder coat (custom colors available)
Unit Dimensions (WxDxH)	2.1" x 2.2" x 70.1" ; 52mm x 55mm x 1780mm
Unit Weight	5.5 kg
Shipping Weight	7.5 kg
Shipping Dimensions (WxDxH)	7.28" x 5.91" x 77.56" ; 185mm x 150mm x 1970mm
Mounting	Tool-less button mount

Technical Specifications / Engineering Submittals

Raritan Model Number: PX3-1027XV-O1V2

rev20230817

ENVIRONMENTAL

Operating Temperature	60°C
Operating Relative Humidity	85%
Operating Elevation	0-10000ft

CONFORMANCE

Regulatory Approvals	UL Recognized, Canada ICES-003, Part 15 Class A of the FCC rules, RoHS compliant
Warranty	Standard 2 years manufacturer warranty

ACCURACY

	Input Measurement
LCD & GUI Current	±1% at 0.1 A resolution
Voltage	±1% at 0.1 V resolution
Active Power	±1% at 1 W resolution
Apparent Power	±1% at 1 VA resolution
Power Factor	±1% at 0.1 resolution
Active Energy	±1% at 0.1 kWh resolution
Branch Measurement	
Current	±1% at 0.1 A resolution

Technical Specifications / Engineering Submittals

Raritan Model Number: PX3-1027XV-O1V2

rev20230817

CONTROL PANEL

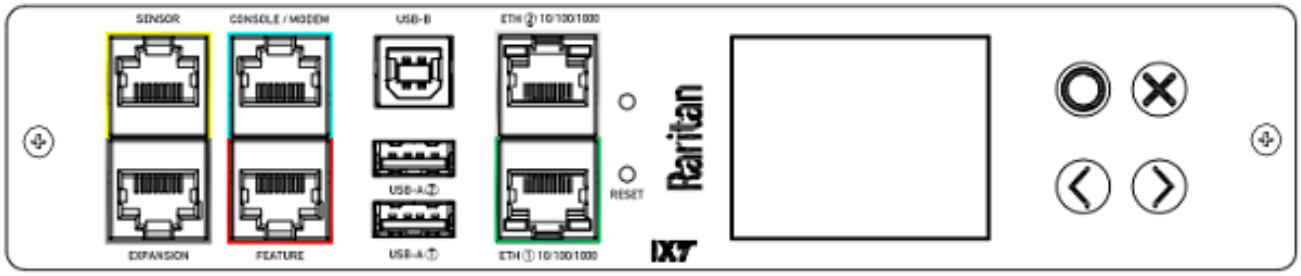

Technical Specifications / Engineering Submittals

Raritan Model Number: PX3-1027XV-01V2

rev20230817

ELECTRICAL (ONE LINE) DIAGRAM

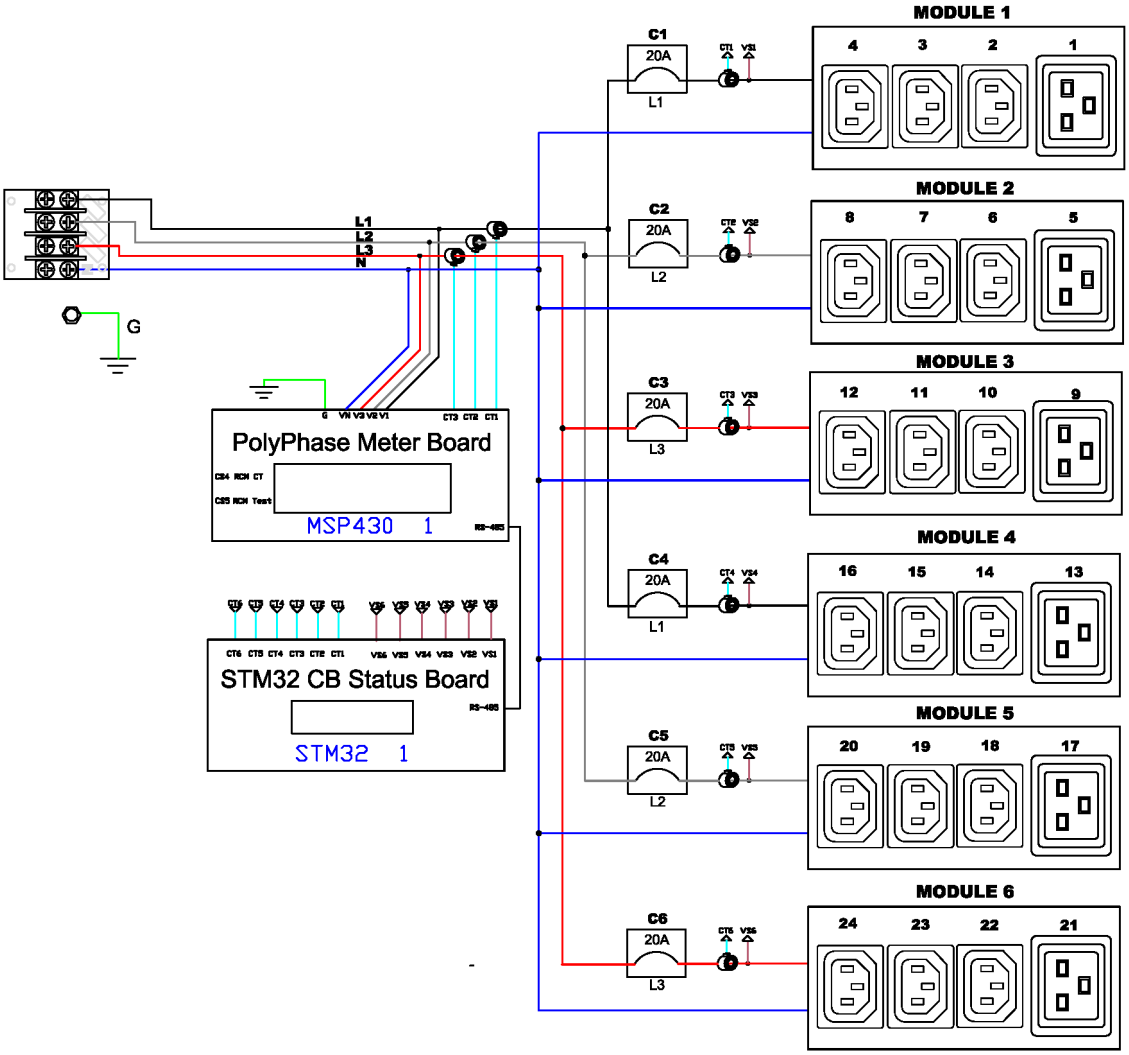

Technical Specifications / Engineering Submittals

Raritan Model Number: PX3-1027XV-O1V2

rev20230817

MECHANICAL DIAGRAM

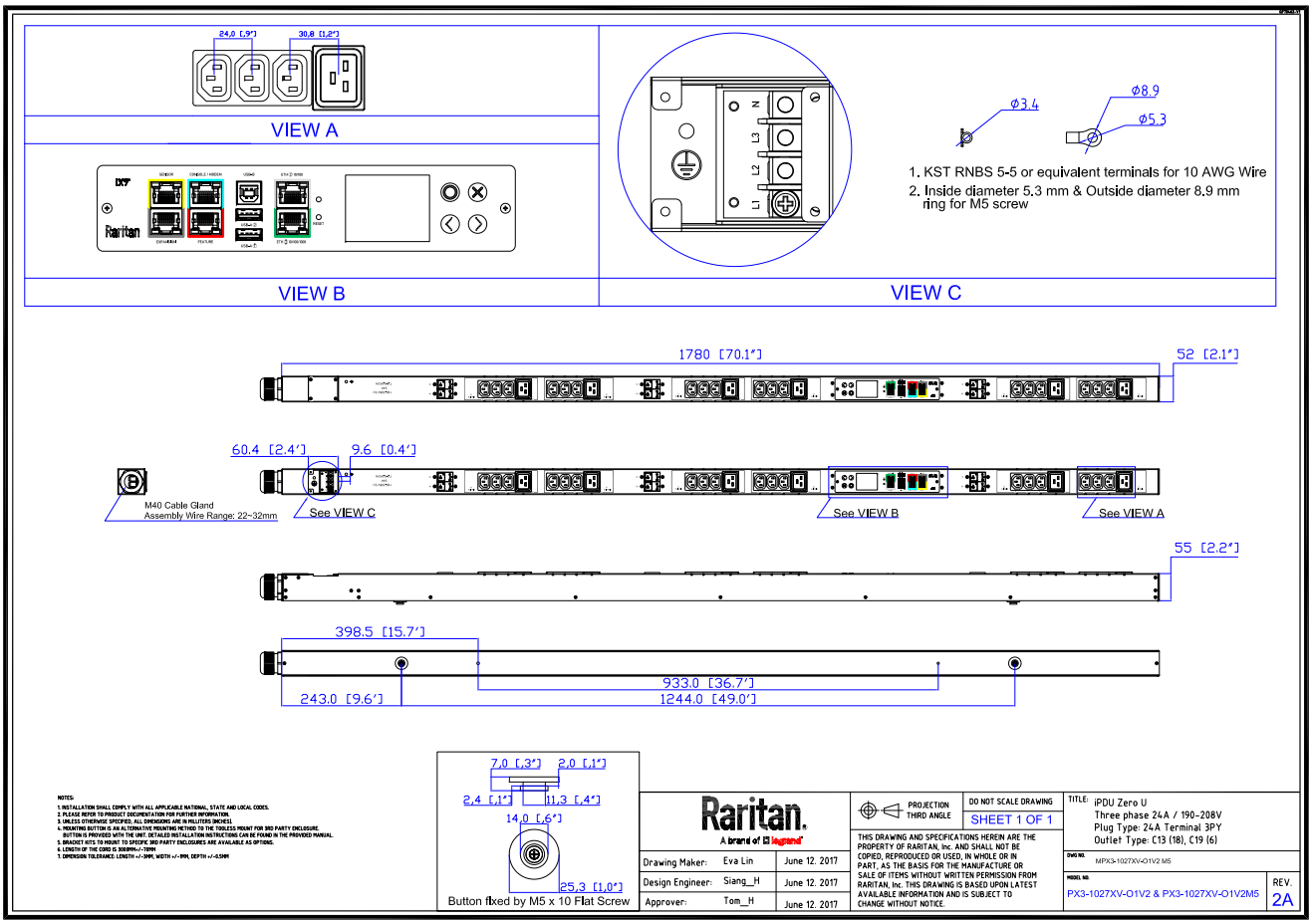

Technical Specifications / Engineering Submittals

Raritan Model Number: PX3-1027XV-O1V2

rev20230817

TRIP CURVE

This file generated on: Thu, August 17, 2023 - 00:44:28