PX3-1905V-O1V2
208V, 3Φ Delta
48A, 17.3kVA

Technical Specifications / Engineering Submittals

Raritan Model Number: PX3-1905V-O1V2

rev20250625

LINE DRAWING

FEATURES

Energy Metering	Voltage (V), Current (A), Active Power (kW), Real Power (kVA), Energy (kWh), Power Factor
Metering Accuracy	ISO/IEC 62053-21 1% (see page 3 for details)
Metering per Input Line	Yes
Metering per Branch Circuit Breaker	Yes
Metering per Output Receptacle	No
Remote Outlet Switching	No
Environmental Sensor Ready	Yes
Replaceable Controller	Yes
Compatible Sensors	Temperature, Humidity, Air Flow, Differential Pressure, Water Leak, and Contact Closure
Networking	Gigabit (10/100/1000 BaseT) Ethernet port; secondary, redundant (10/100/1000 BaseT) Ethernet port. Optional WiFi (802.11a/b/g/n)
Remote Management	HTTP(s); SSH; Telnet; RS-232 (Serial); Power IQ; SNMP version v2/v3; SMTP; JSON-RPC; Modbus over TCP
Cascading	Yes, Max 32 PDUs can be daisy chained using a USB connection and 32 PDUs using Ethernet connection
Onboard Display	Color, matrix LCD display : Voltage, current, or active power (per line or per breaker); Alarms; Configuration information (name, ratings, IP / Networking information); Auto-flip orientation
Embedded Processor	ARM Cortex A5 536MHZ (Atmel A5D35A), 16MB SPI Flash, 64MB DDR2 RAM

Raritan
A brand of legrand

Technical Specifications / Engineering Submittals

Raritan Model Number: PX3-1905V-O1V2

rev20250625

INPUT

Input Plug	IEC 60309 3P+E 9h 60A (3P4W), IP67
Cord Length	3 meters (9.84 feet) standard
Cord Entry	Bottom-bottom feed
Cable Type	SOOW 4C#4
Number of Power Cords	1
Maximum Input Current	60A
Nominal Input Voltage	208V 3 phase
Rated Input Voltage	208 - 240V 3 phase
Input Frequency	50/60Hz
Power Capacity	17.3kVA at 208V, 20.0kVA at 240V

OUTPUT

Nominal Output Voltage	208V
Rated Output Voltage	208 - 240V
Receptacles (Output Connections)	(24) IEC320 C13, 12A (12) IEC320 C19, 16A
Securelock Support	Yes
Cord Retention	Yes
Overload Protection	(6) LEJBX66-20, 10KAIC

PHYSICAL

Color	Black powder coat (custom colors available)
Unit Dimensions (WxDxH)	2.3" x 3.1" x 78.0" ; 59mm x 80mm x 1981mm
Unit Weight	9.5 kg
Shipping Weight	13.5 kg
Shipping Dimensions (WxDxH)	14.96" x 5.51" x 90.43" ; 380mm x 140mm x 2297mm
Mounting	G3-RACK-FOR-ZU

Technical Specifications / Engineering Submittals

Raritan Model Number: PX3-1905V-O1V2

rev20250625

ENVIRONMENTAL

Operating Temperature	60°C
Operating Relative Humidity	85%
Operating Elevation	0-6000ft

CONFORMANCE

Regulatory Approvals	UL Listed, Canada ICES-003, Part 15 Class A of the FCC rules, RoHS compliant
Warranty	Standard 2 years manufacturer warranty

ACCURACY

	Input Measurement
LCD & GUI Current	±1% at 0.1 A resolution
Voltage	±1% at 0.1 V resolution
Active Power	±1% at 1 W resolution
Apparent Power	±1% at 1 VA resolution
Power Factor	±1% at 0.1 resolution
Active Energy	±1% at 0.1 kWh resolution
Branch Measurement	
Current	±1% at 0.1 A resolution

Technical Specifications / Engineering Submittals

Raritan Model Number: PX3-1905V-O1V2

rev20250625

CONTROL PANEL

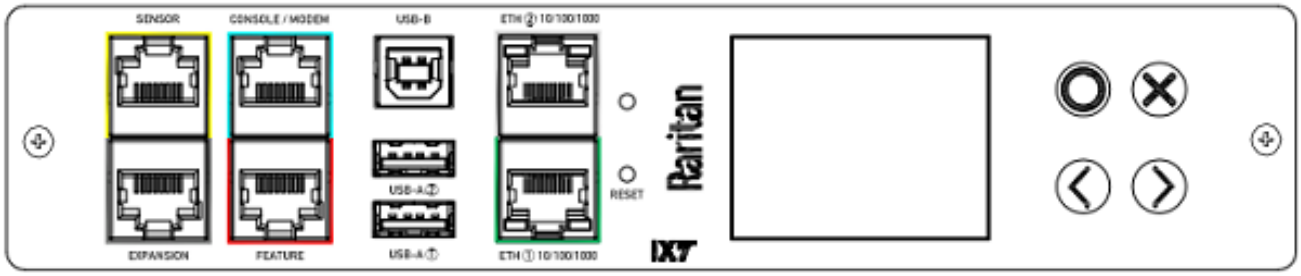

Technical Specifications / Engineering Submittals

Raritan Model Number: PX3-1905V-O1V2

rev20250625

ELECTRICAL (ONE LINE) DIAGRAM

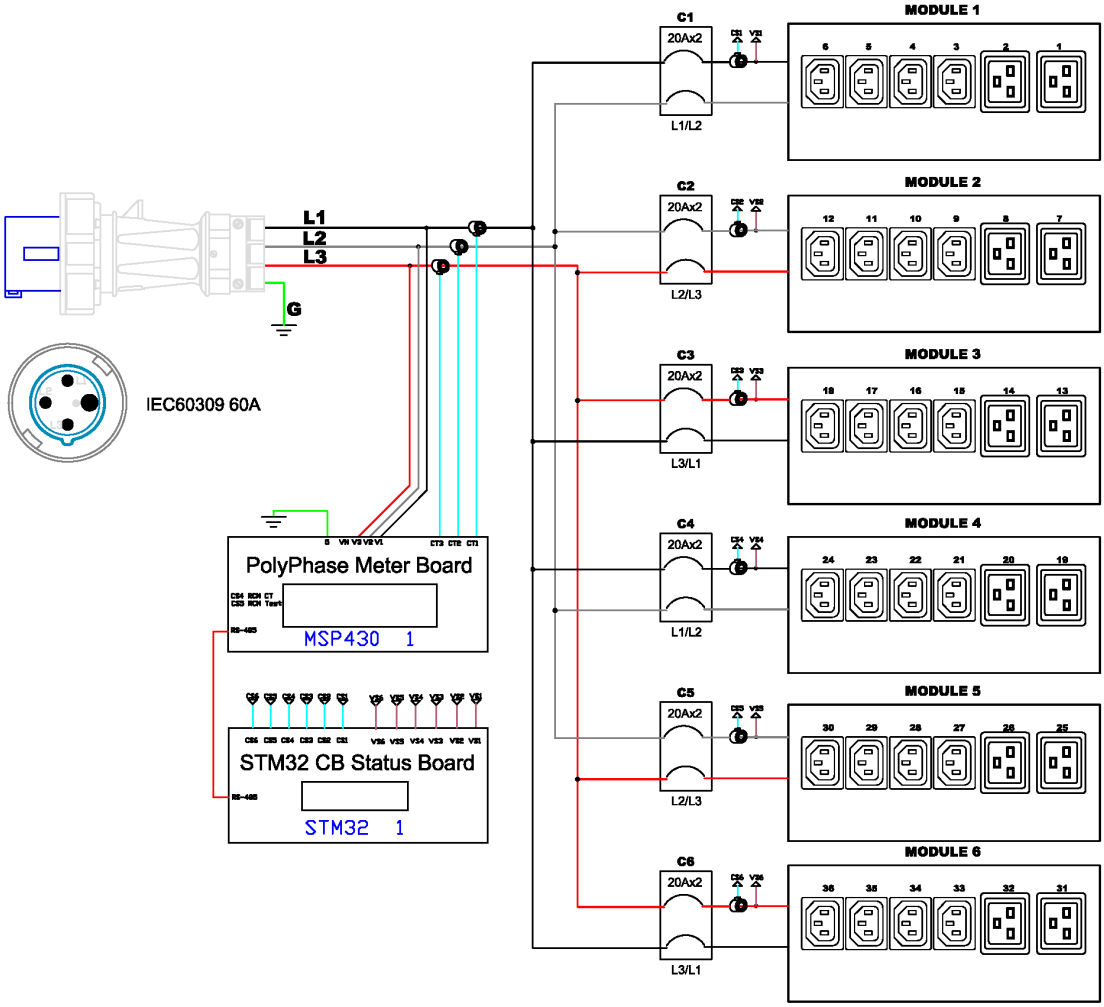

Technical Specifications / Engineering Submittals

Raritan Model Number: PX3-1905V-O1V2

rev20250625

MECHANICAL DIAGRAM

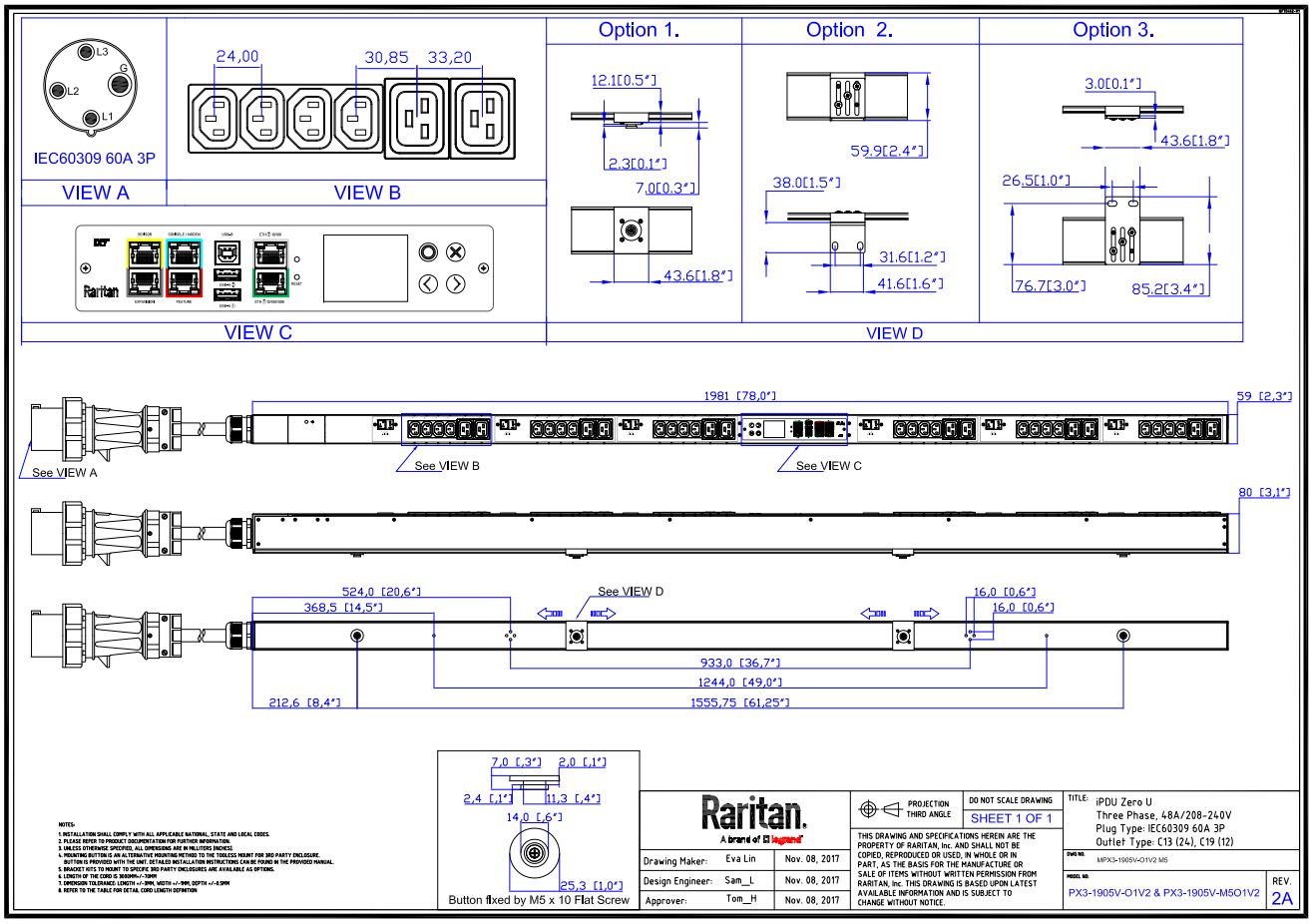

Technical Specifications / Engineering Submittals

Raritan Model Number: PX3-1905V-O1V2

rev20250625

TRIP CURVE

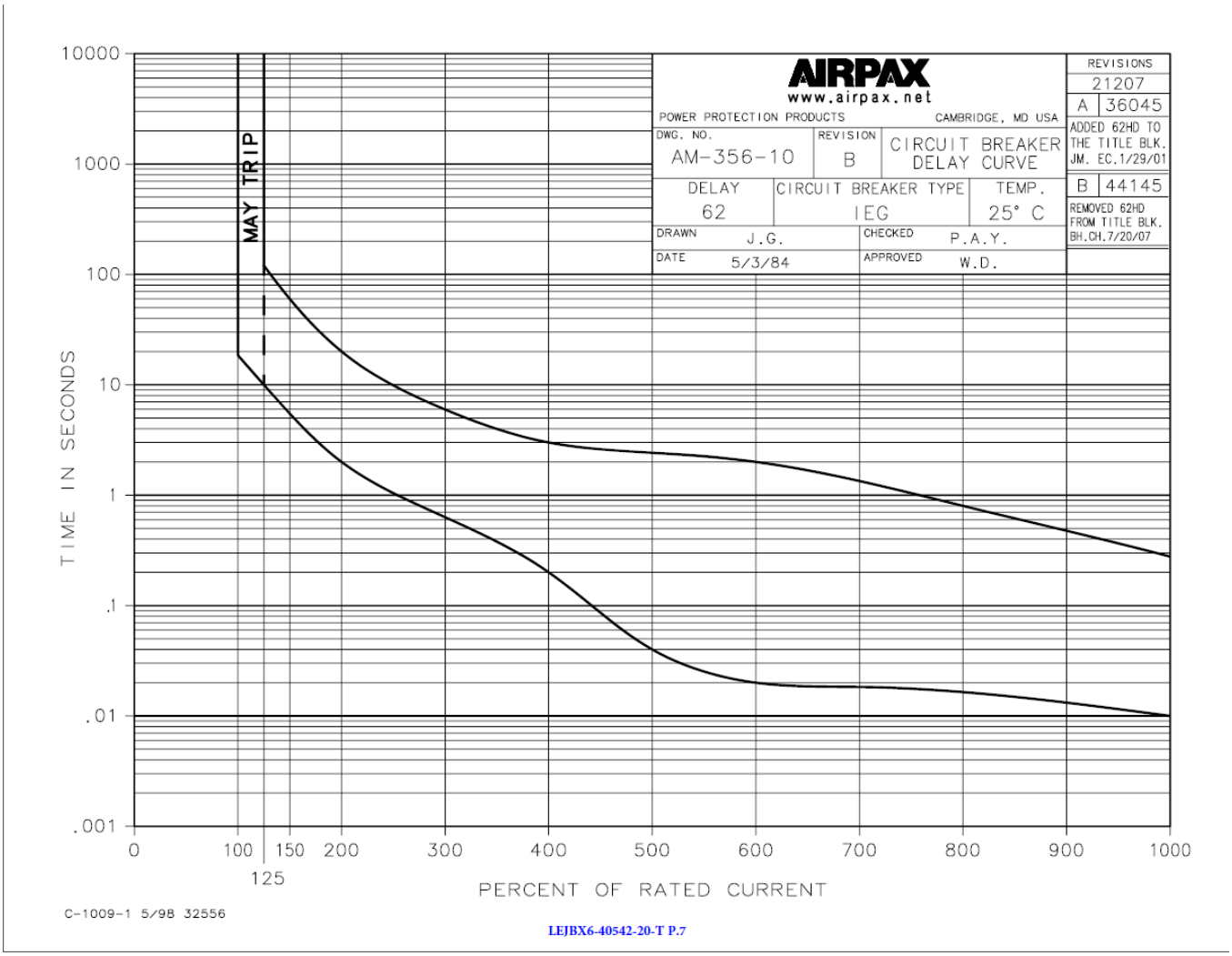

This file generated on: Wed, June 25, 2025 - 03:04:51

PDF technology powered by Apryse™ and distributed by Legrand DPC, LLC under license. All rights reserved.