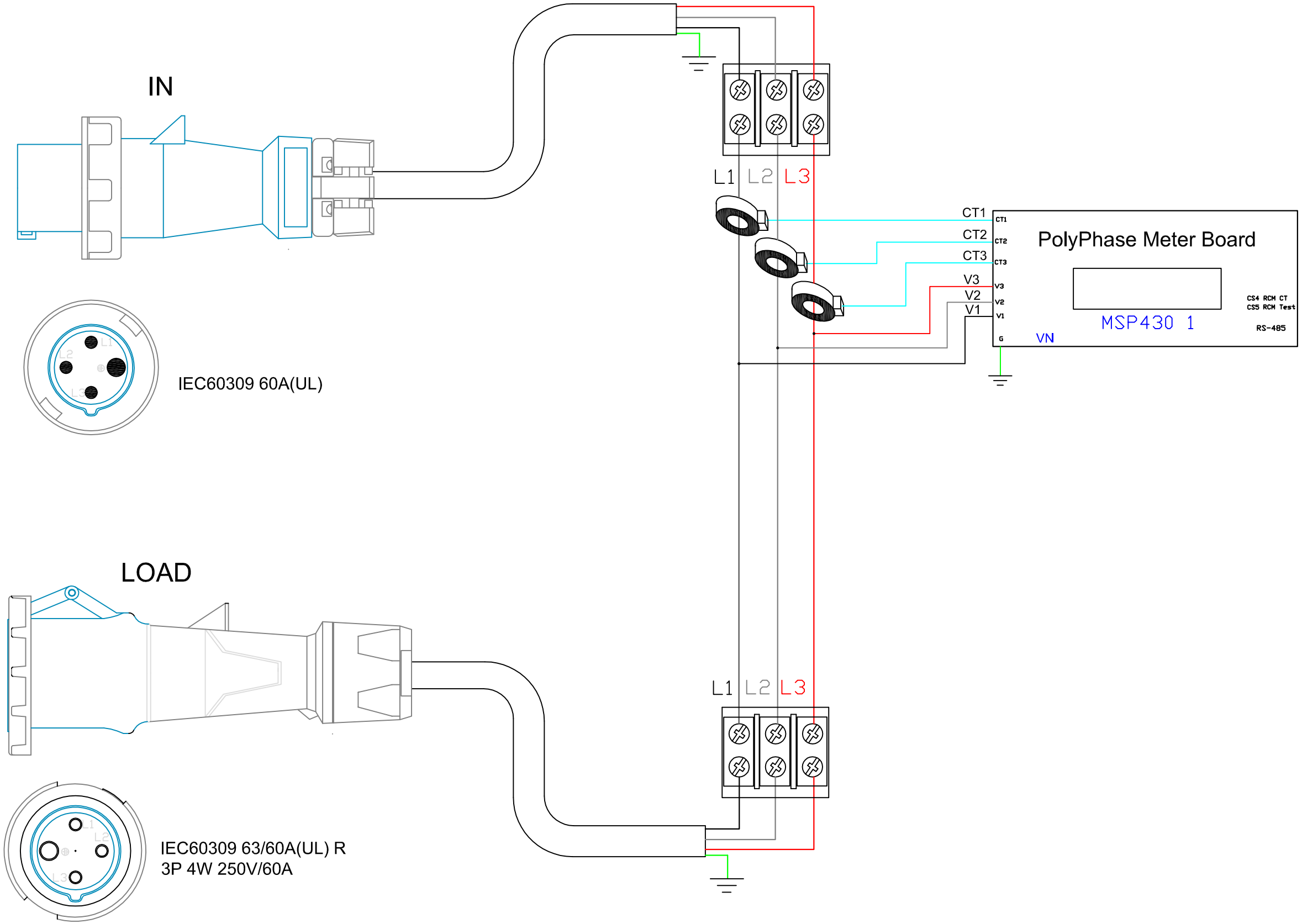

Raritan
www.raritan.com

DRAWN : Caspar	DEC/11/2014	
ENGINEER: Caspar	DEC/11/2014	
APPROVED: Bright.Yu	DEC/11/2014	

PROJECTION THIRD ANGLE

DO NOT SCALE DRAWING

SHEET 1 OF 1

THIS DRAWING AND SPECIFICATIONS HEREIN ARE THE PROPERTY OF RARITAN, INC. AND SHALL NOT BE COPIED, REPRODUCED OR USED, IN WHOLE OR IN PART, AS THE BASIS FOR THE MANUFACTURE OR SALE OF ITEMS WITHOUT WRITTEN PERMISSION FROM RARITAN, INC. THIS DRAWING IS BASED UPON LATEST AVAILABLE INFORMATION AND IS SUBJECT TO CHANGE WITHOUT NOTICE..

TITLE:
iPDU 0U, Metered only, 3 phase, Delta
48A / 208-240V
Input : IEC60309 60A
Output : IEC60309 60A R

DWG NO. TPX3-3183

REV. 0A