Raritan
A brand of legrand

PX3-4905YU-E2N1P1V2
208V, 3Φ Delta
48A, 17.3kVA

Technical Specifications / Engineering Submittals

Raritan Model Number: PX3-4905YU-E2N1P1V2

rev20230817

LINE DRAWING

FEATURES

Energy Metering	Voltage (V), Current (A), Active Power (kW), Real Power (kVA), Energy (kWh), Power Factor
Metering Accuracy	ISO/IEC 62053-21 1% (see page 3 for details)
Metering per Input Line	Yes
Metering per Branch Circuit Breaker	Yes
Metering per Output Receptacle	Yes
Remote Outlet Switching	No
Environmental Sensor Ready	Yes
Replaceable Controller	Yes
Compatible Sensors	Temperature, Humidity, Air Flow, Differential Pressure, Water Leak, and Contact Closure
Networking	Gigabit (10/100/1000 BaseT) Ethernet port; secondary, redundant (10/100/1000 BaseT) Ethernet port. Optional WiFi (802.11a/b/g/n)
Remote Management	HTTP(s); SSH; Telnet; RS-232 (Serial); Power IQ; SNMP version v2/v3; SMTP; JSON-RPC; Modbus over TCP
Cascading	Yes, Max 16 PDUs can be daisy chained using a single Ethernet or USB connection
Onboard Display	Color, matrix LCD display : Voltage, current, or active power (per line, per breaker, or per receptacle / outlet); Alarms; Configuration information (name, ratings, IP / Networking information); Auto-flip orientation
Embedded Processor	ARM Cortex A5 536MHZ (Atmel A5D35A), 16MB SPI Flash, 64MB DDR2 RAM

Technical Specifications / Engineering Submittals

Raritan Model Number: PX3-4905YU-E2N1P1V2

rev20230817

INPUT

Input Plug	AC Terminal (N/A)
Cord Length	N/A
Cord Entry	Top-end feed
Cable Type	
Number of Power Cords	N/A
Maximum Input Current	48A
Nominal Input Voltage	208V 3 phase
Rated Input Voltage	208 - 240V 3 phase
Input Frequency	50/60Hz
Power Capacity	17.3kVA at 208V, 20.0kVA at 240V

OUTPUT

Nominal Output Voltage	208V
Rated Output Voltage	208 - 240V
Receptacles (Output Connections)	(24) IEC60320 C13 Locking, 12A (12) IEC60320 C19 Locking, 16A
Securelock Support	Yes
Cord Retention	No
Overload Protection	(6) LEGBX66-20

PHYSICAL

Color	Black powder coat (custom colors available)
Unit Dimensions (WxDxH)	3.1" x 3.5" x 65.0" ; 79mm x 89mm x 1650mm
Unit Weight	8.8 kg
Shipping Weight	11.5 kg
Shipping Dimensions (WxDxH)	8.46" x 8.07" x 76.77" ; 215mm x 205mm x 1950mm
Mounting	Tool-less button mount

Technical Specifications / Engineering Submittals

Raritan Model Number: PX3-4905YU-E2N1P1V2

rev20230817

ENVIRONMENTAL

Operating Temperature	60°C
Operating Relative Humidity	85%
Operating Elevation	0-10000ft

CONFORMANCE

Regulatory Approvals	UL Listed, Canada ICES-003, Part 15 Class A of the FCC rules, RoHS compliant
Warranty	Standard 2 years manufacturer warranty

ACCURACY

	Input Measurement	**Output Measurement**
LCD & GUI Current	±1% at 0.1 A resolution	±1% at 0.1 A resolution
Voltage	±1% at 0.1 V resolution	±1% at 0.1 V resolution
Active Power	±1% at 1 W resolution	±1% at 1 W resolution
Apparent Power	±1% at 1 VA resolution	±1% at 1 VA resolution
Power Factor	±1% at 0.1 resolution	±1% at 0.1 resolution
Active Energy	±1% at 0.1 kWh resolution	±1% at 0.1 kWh resolution
Branch Measurement		
Current	±1% at 0.1 A resolution	

Technical Specifications / Engineering Submittals

Raritan Model Number: PX3-4905YU-E2N1P1V2

rev20230817

CONTROL PANEL

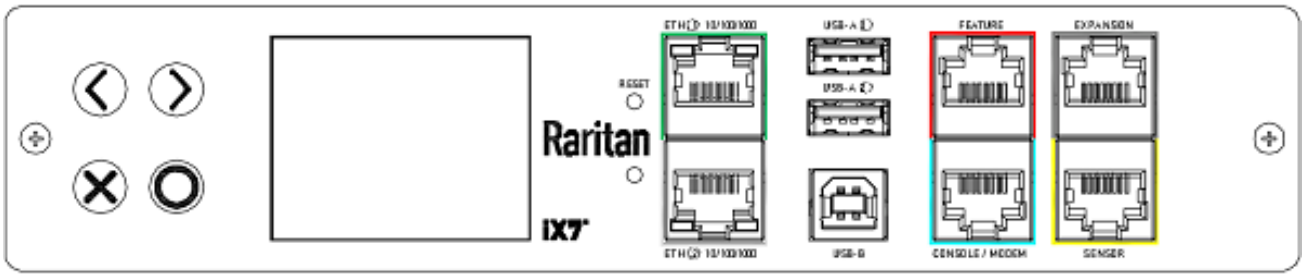

Technical Specifications / Engineering Submittals

Raritan Model Number: PX3-4905YU-E2N1P1V2

rev20230817

ELECTRICAL (ONE LINE) DIAGRAM

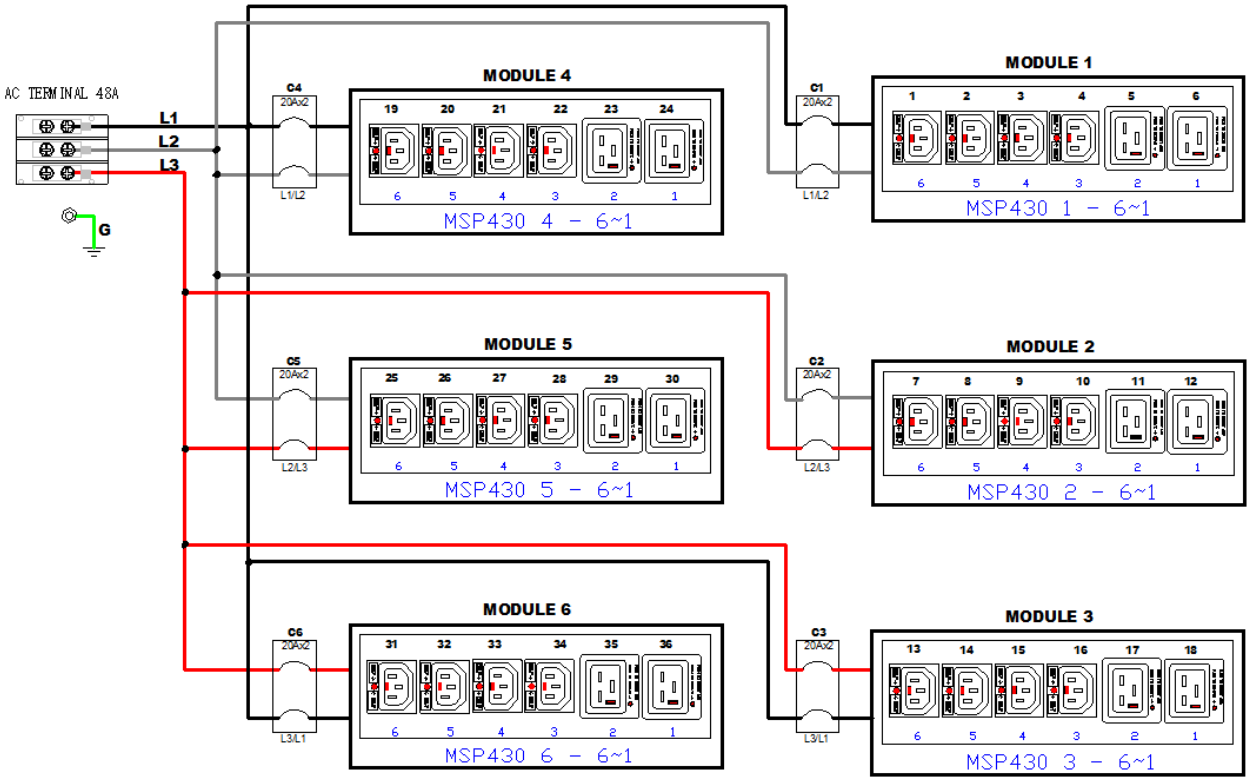

Technical Specifications / Engineering Submittals

Raritan Model Number: PX3-4905YU-E2N1P1V2

rev20230817

MECHANICAL DIAGRAM

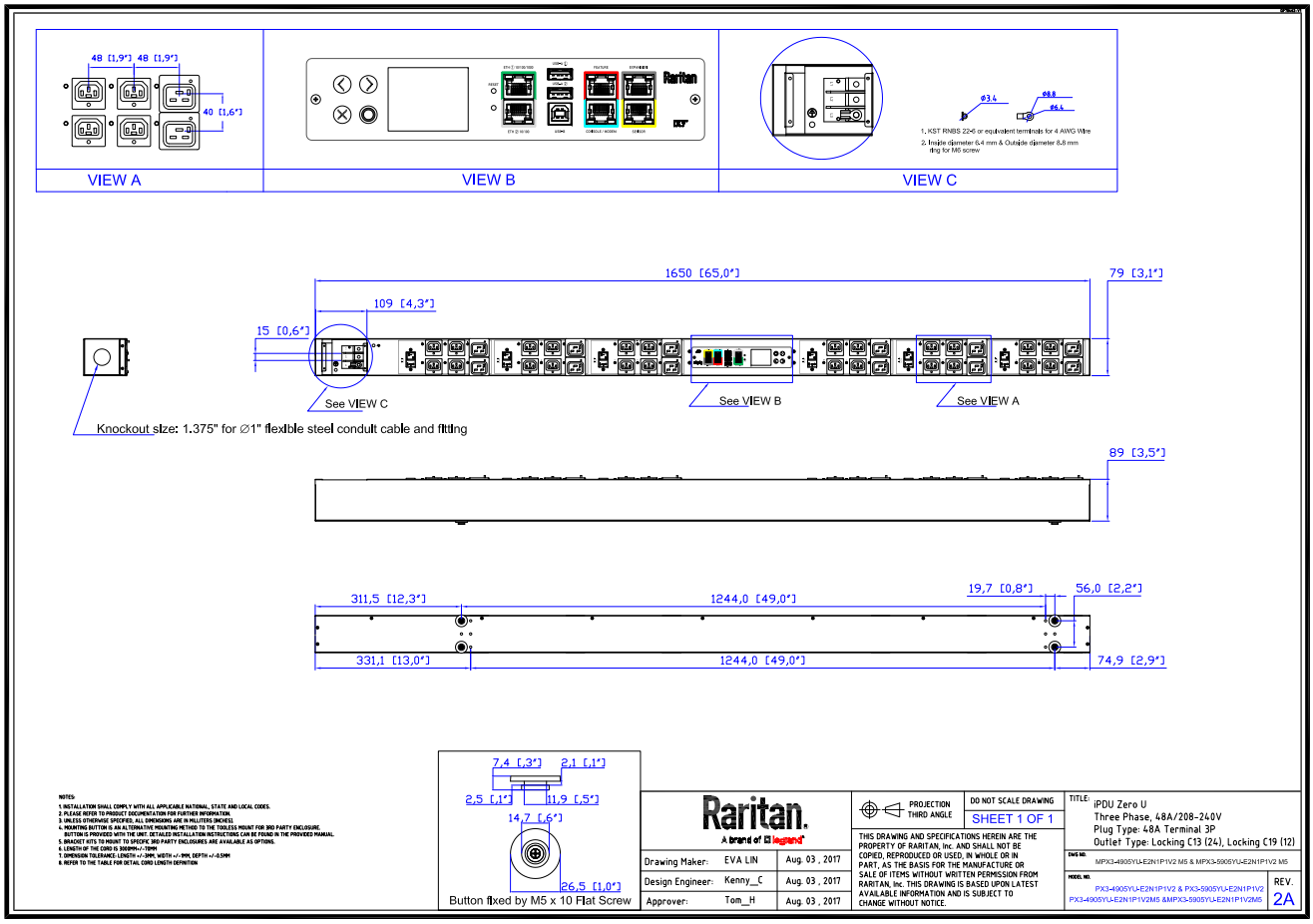

Technical Specifications / Engineering Submittals

Raritan Model Number: PX3-4905YU-E2N1P1V2

rev20230817

TRIP CURVE

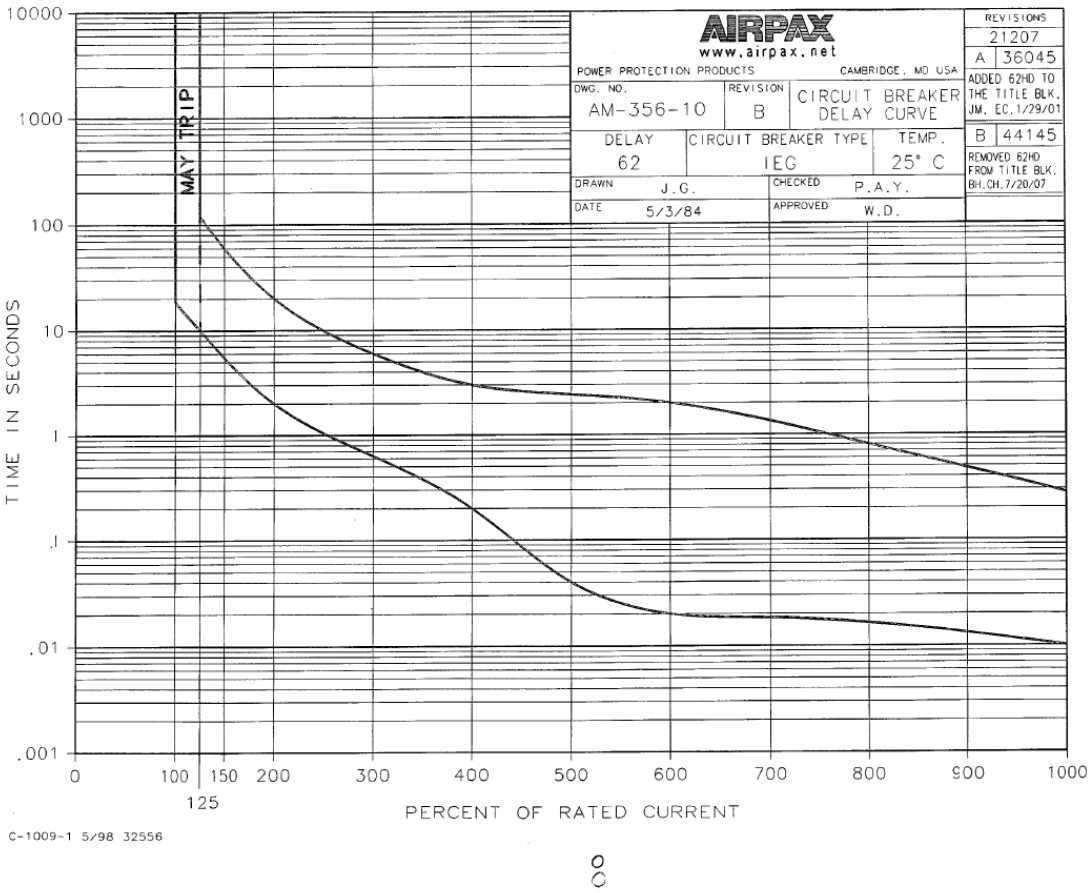

This file generated on: Thu, August 17, 2023 - 01:21:35