PX3-5219X2
120V, 1Φ
16A, 3.8kVA

Technical Specifications / Engineering Submittals

Raritan Model Number: PX3-5219X2

rev20230817

LINE DRAWING

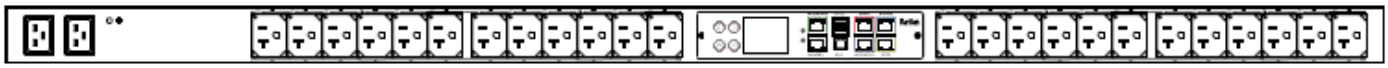

FEATURES

Energy Metering	Voltage (V), Current (A), Active Power (kW), Real Power (kVA), Energy (kWh), Power Factor
Metering Accuracy	ISO/IEC 62053-21 1% (see page 3 for details)
Metering per Input Line	Yes
Metering per Branch Circuit Breaker	No
Metering per Output Receptacle	Yes
Remote Outlet Switching	Yes
Environmental Sensor Ready	Yes
Replaceable Controller	Yes
Compatible Sensors	Temperature, Humidity, Air Flow, Differential Pressure, Water Leak, and Contact Closure
Networking	Gigabit (10/100/1000 BaseT) Ethernet port; secondary, redundant (10/100/1000 BaseT) Ethernet port. Optional WiFi (802.11a/b/g/n)
Remote Management	HTTP(s); SSH; Telnet; RS-232 (Serial); Power IQ; SNMP version v2/v3; SMTP; JSON-RPC; Modbus over TCP
Cascading	Yes, Max 16 PDUs can be daisy chained using a single Ethernet or USB connection
Onboard Display	Color, matrix LCD display : Voltage, current, or active power (per line, or per receptacle /outlet); Alarms; Configuration information (name, ratings, IP / Networking information); Auto-flip orientation
Embedded Processor	ARM Cortex A5 536MHZ (Atmel A5D35A), 16MB SPI Flash, 64MB DDR2 RAM

Raritan
A brand of legrand

Technical Specifications / Engineering Submittals

Raritan Model Number: PX3-5219X2

rev20230817

INPUT

Input Plug	NEMA L5-20P (2P3W)
Cord Length	3 meters (9.84 feet) standard
Cord Entry	Bottom-front feed
Cable Type	IP44("splashproof")
Number of Power Cords	2
Maximum Input Current	20A
Nominal Input Voltage	120V
Rated Input Voltage	100 - 120V
Input Frequency	50/60Hz
Power Capacity	3.2kVA at 100V, 3.8kVA at 120V

OUTPUT

Nominal Output Voltage	120V
Rated Output Voltage	100 - 120V
Receptacles (Output Connections)	(24) NEMA 5-20R, 16A
Securelock Support	No
Cord Retention	Yes
Overload Protection	N/A

PHYSICAL

Color	Black powder coat (custom colors available)
Unit Dimensions (WxDxH)	2.1" x 2.6" x 51.1" ; 52mm x 65mm x 1298mm
Unit Weight	3.5 kg
Shipping Weight	6.4 kg
Shipping Dimensions (WxDxH)	7.28" x 7.28" x 55.43" ; 185mm x 185mm x 1408mm
Mounting	G2-RACK-FOR-ZU

Technical Specifications / Engineering Submittals

Raritan Model Number: PX3-5219X2

rev20230817

ENVIRONMENTAL

Operating Temperature	60°C
Operating Relative Humidity	85%
Operating Elevation	0-10000ft

CONFORMANCE

Regulatory Approvals	UL Listed, Canada ICES-003, Part 15 Class A of the FCC rules, RoHS compliant
Warranty	Standard 2 years manufacturer warranty

ACCURACY

	Input Measurement	Output Measurement
LCD & GUI Current	±1% at 0.1 A resolution	±1% at 0.1 A resolution
Voltage	±1% at 0.1 V resolution	±1% at 0.1 V resolution
Active Power	±1% at 1 W resolution	±1% at 1 W resolution
Apparent Power	±1% at 1 VA resolution	±1% at 1 VA resolution
Power Factor	±1% at 0.1 resolution	±1% at 0.1 resolution
Active Energy	±1% at 0.1 kWh resolution	±1% at 0.1 kWh resolution

Technical Specifications / Engineering Submittals

Raritan Model Number: PX3-5219X2

rev20230817

CONTROL PANEL

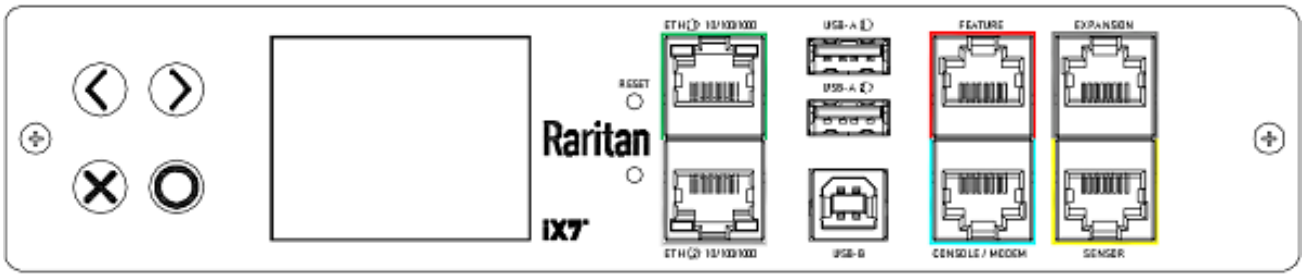

Technical Specifications / Engineering Submittals

Raritan Model Number: PX3-5219X2

rev20230817

ELECTRICAL (ONE LINE) DIAGRAM

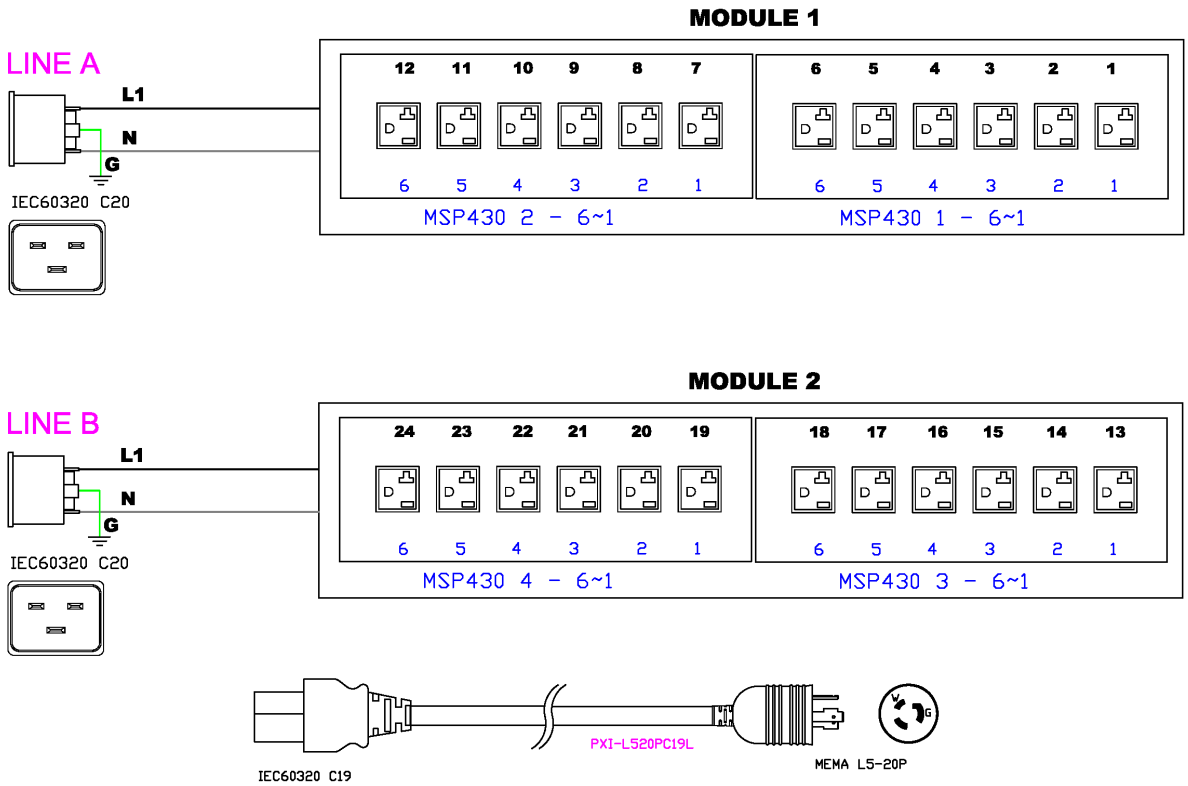

Technical Specifications / Engineering Submittals

Raritan Model Number: PX3-5219X2

rev20230817

MECHANICAL DIAGRAM

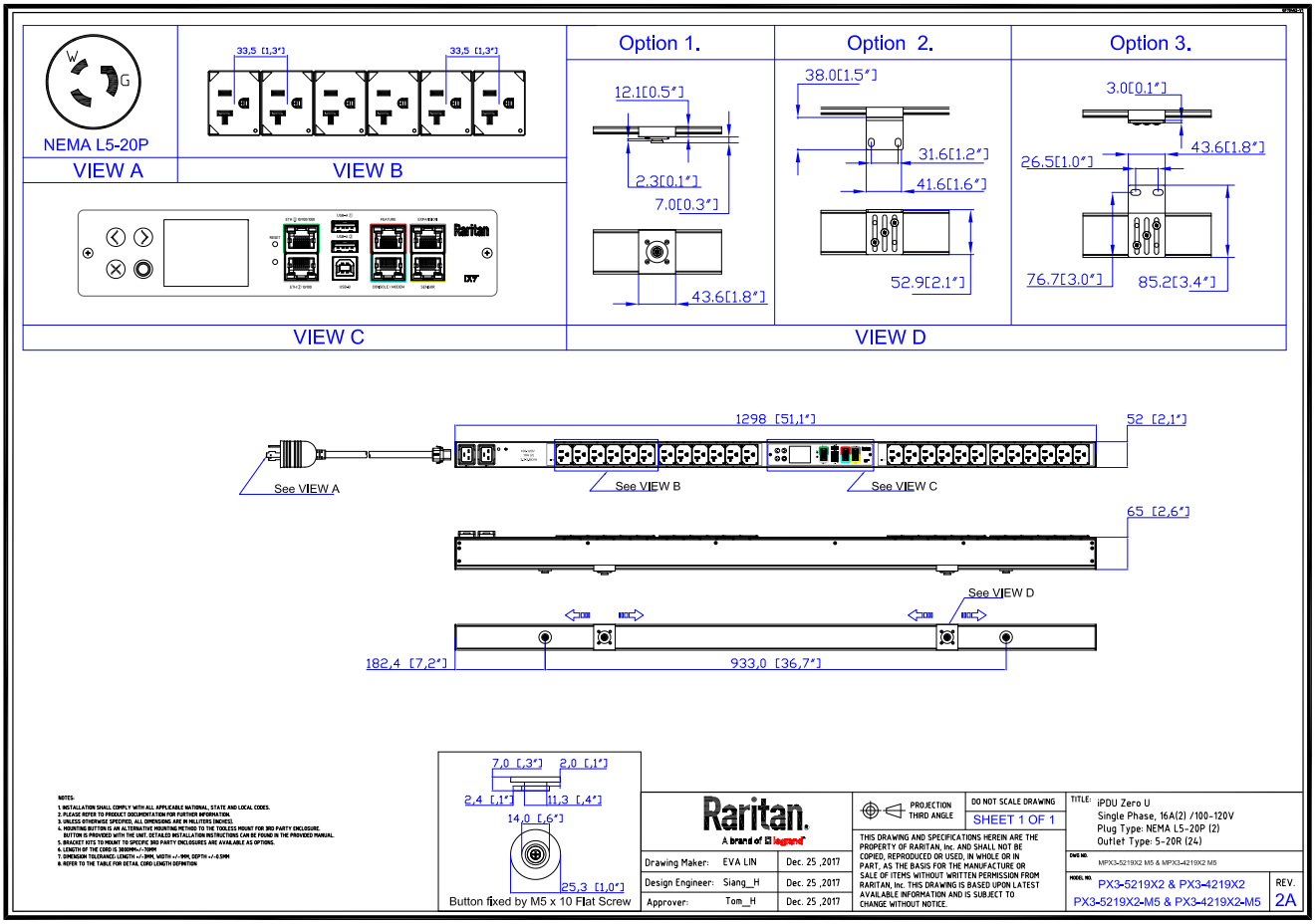

Technical Specifications / Engineering Submittals

Raritan Model Number: PX3-5219X2

rev20230817

Mounting Diagram (G2-RACK-FOR-ZU)

250-70-0104-00

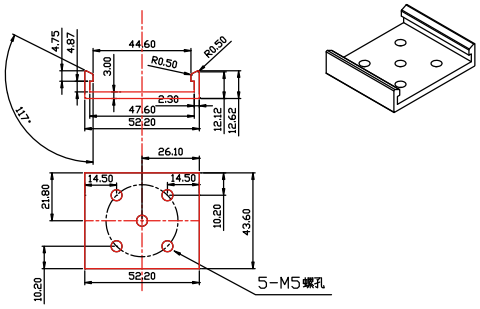

250-80-0011-00

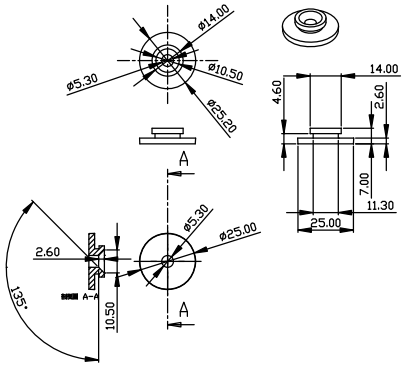

250-70-0007-00

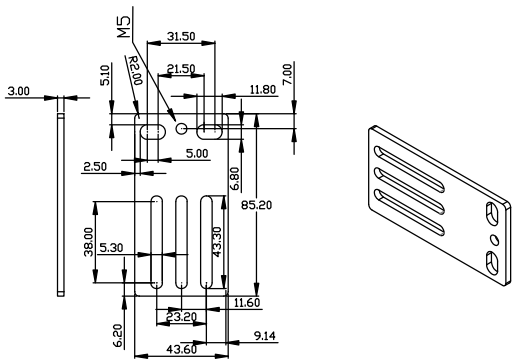

250-70-0093-00

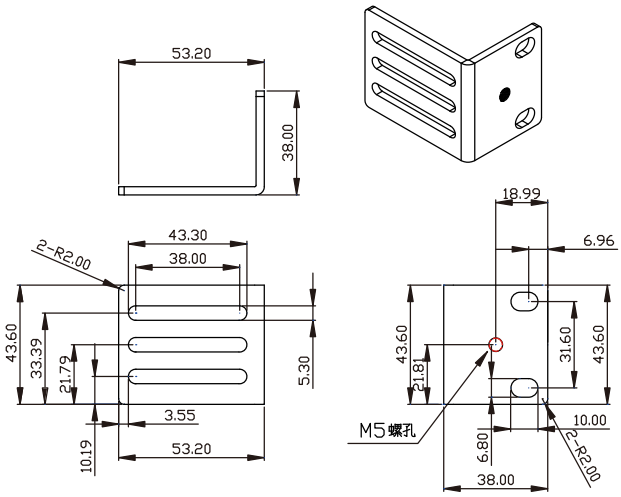

Technical Specifications / Engineering Submittals

Raritan Model Number: PX3-5219X2

rev20230817

TRIP CURVE

This file generated on: Thu, August 17, 2023 - 01:29:37