**PX3-5528A1V-M5V2**
415V, 3Φ Wye
32A, 23.0kVA

# Technical Specifications / Engineering Submittals

Raritan Model Number: PX3-5528A1V-M5V2

rev20230817

## LINE DRAWING

## FEATURES

| | |
|---|---|
| **Energy Metering** | Voltage (V), Current (A), Active Power (kW), Real Power (kVA), Energy (kWh), Power Factor |
| **Metering Accuracy** | ISO/IEC 62053-21 1% (see page 3 for details) |
| **Metering per Input Line** | Yes |
| **Metering per Branch Circuit Breaker** | Yes |
| **Metering per Output Receptacle** | Yes |
| **Remote Outlet Switching** | Yes |
| **Environmental Sensor Ready** | Yes |
| **Replaceable Controller** | Yes |
| **Compatible Sensors** | Temperature, Humidity, Air Flow, Differential Pressure, Water Leak, and Contact Closure |
| **Networking** | Gigabit (10/100/1000 BaseT) Ethernet port; secondary, redundant (10/100/1000 BaseT) Ethernet port. Optional WiFi (802.11a/b/g/n) |
| **Remote Management** | HTTP(s); SSH; Telnet; RS-232 (Serial); Power IQ; SNMP version v2/v3; SMTP; JSON-RPC; Modbus over TCP |
| **Cascading** | Yes, Max 16 PDUs can be daisy chained using a single Ethernet or USB connection |
| **Onboard Display** | Color, matrix LCD display : Voltage, current, or active power (per line, per breaker, or per receptacle / outlet); Alarms; Configuration information (name, ratings, IP / Networking information); Auto-flip orientation |
| **Embedded Processor** | ARM Cortex A5 536MHZ (Atmel A5D35A), 16MB SPI Flash, 64MB DDR2 RAM |

# Technical Specifications / Engineering Submittals

Raritan Model Number: PX3-5528A1V-M5V2

rev20230817

## INPUT

| | |
|---|---|
| **Input Plug** | Clipsal 56P532 (4P5W) |
| **Cord Length** | 3 meters (9.84 feet) standard |
| **Cord Entry** | Bottom-bottom feed |
| **Cable Type** | IP66 |
| **Number of Power Cords** | 1 |
| **Maximum Input Current** | 32A |
| **Nominal Input Voltage** | 415V 3 phase |
| **Rated Input Voltage** | 415 - 415V 3 phase |
| **Input Frequency** | 50/60Hz |
| **Power Capacity** | 23.0kVA at 415V, 23.0kVA at 415V |

## OUTPUT

| | |
|---|---|
| **Nominal Output Voltage** | 240V |
| **Rated Output Voltage** | 240 - 240V |
| **Receptacles (Output Connections)** | (18) IEC320 C13, 10A<br>(6) IEC320 C19, 16A |
| **Securelock Support** | Yes |
| **Cord Retention** | Yes |
| **Overload Protection** | (6) LEGBXA6-16 |

## PHYSICAL

| | |
|---|---|
| **Color** | Black powder coat (custom colors available) |
| **Unit Dimensions (WxDxH)** | 2.1" x 2.6" x 70.1" ; 52mm x 65mm x 1780mm |
| **Unit Weight** | 7.9 kg |
| **Shipping Weight** | 9.2 kg |
| **Shipping Dimensions (WxDxH)** | 11.02" x 4.53" x 80.91" ; 280mm x 115mm x 2055mm |
| **Mounting** | G2-RACK-FOR-ZU |

# Technical Specifications / Engineering Submittals

Raritan Model Number: PX3-5528A1V-M5V2

rev20230817

## ENVIRONMENTAL

| | |
|---|---|
| **Operating Temperature** | 60°C |
| **Operating Relative Humidity** | 85% |
| **Operating Elevation** | 0-10000ft |

## CONFORMANCE

| | |
|---|---|
| **Regulatory Approvals** | CE, Canada ICES-003, Part 15 Class A of the FCC rules, RoHS compliant |
| **Warranty** | Standard 2 years manufacturer warranty |

## ACCURACY

| | **Input Measurement** | **Output Measurement** |
|---|---|---|
| **LCD & GUI Current** | ±1% at 0.1 A resolution | ±1% at 0.1 A resolution |
| **Voltage** | ±1% at 0.1 V resolution | ±1% at 0.1 V resolution |
| **Active Power** | ±1% at 1 W resolution | ±1% at 1 W resolution |
| **Apparent Power** | ±1% at 1 VA resolution | ±1% at 1 VA resolution |
| **Power Factor** | ±1% at 0.1 resolution | ±1% at 0.1 resolution |
| **Active Energy** | ±1% at 0.1 kWh resolution | ±1% at 0.1 kWh resolution |
| Branch Measurement | | |
| **Current** | ±1% at 0.1 A resolution | |

# Technical Specifications / Engineering Submittals

Raritan Model Number: PX3-5528A1V-M5V2

rev20230817

## CONTROL PANEL

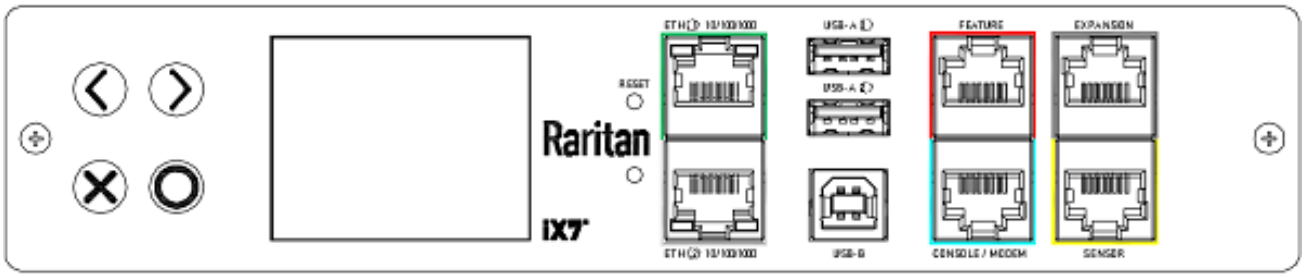

# Technical Specifications / Engineering Submittals

Raritan Model Number: PX3-5528A1V-M5V2

rev20230817

## ELECTRICAL (ONE LINE) DIAGRAM

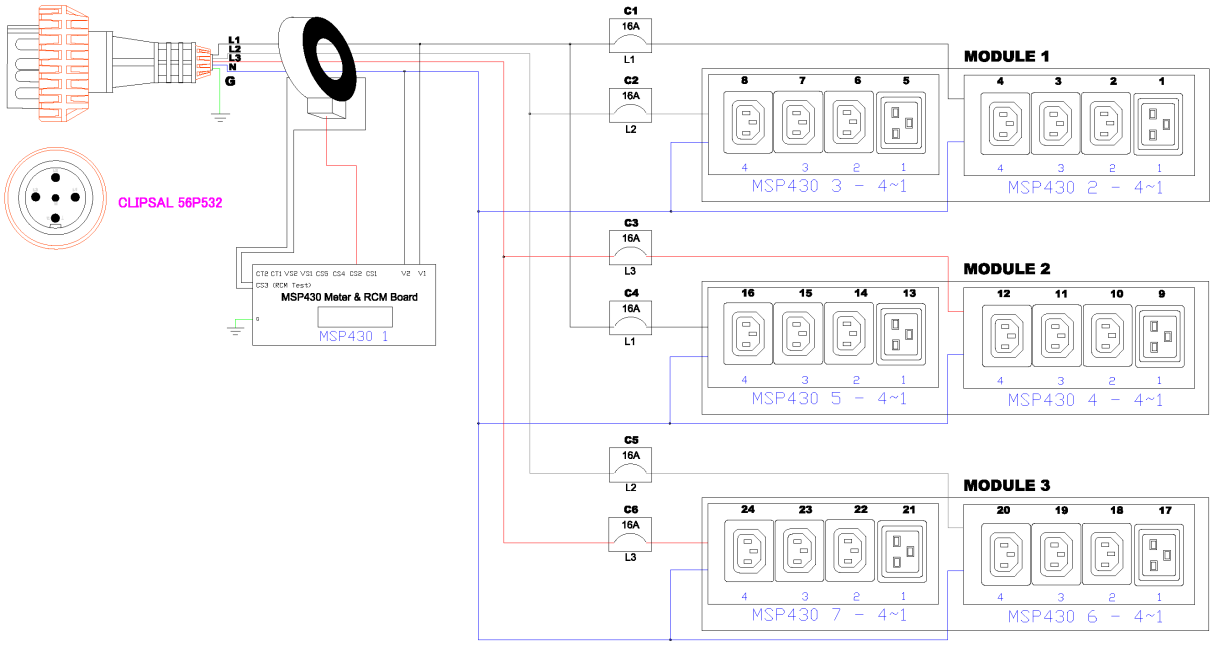

# Technical Specifications / Engineering Submittals

Raritan Model Number: PX3-5528A1V-M5V2

rev20230817

## MECHANICAL DIAGRAM

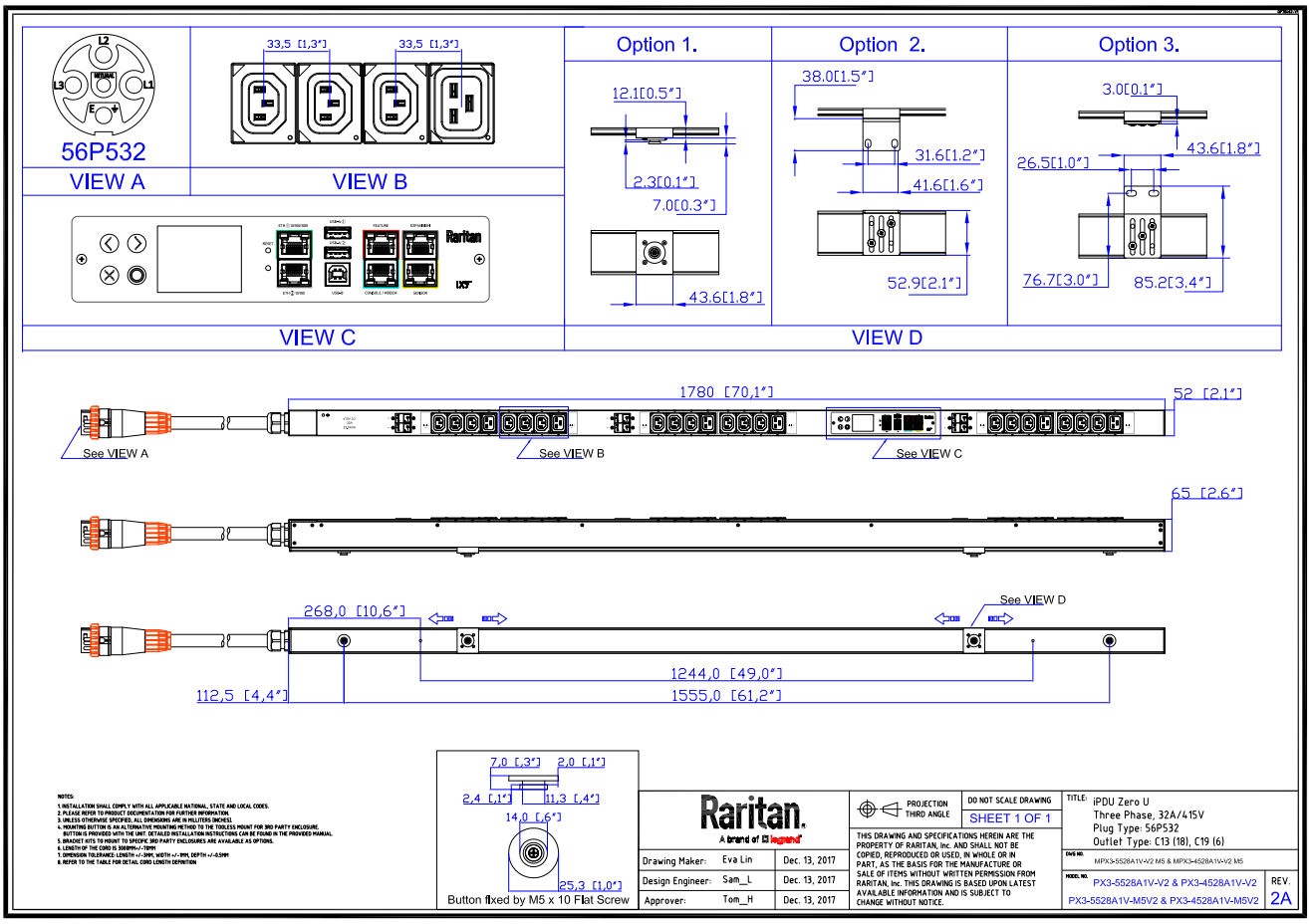

# Technical Specifications / Engineering Submittals

Raritan Model Number: PX3-5528A1V-M5V2

rev20230817

## Mounting Diagram (G2-RACK-FOR-ZU)

**250-70-0104-00**

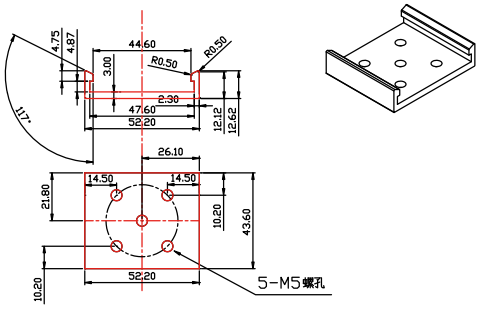


**250-80-0011-00**

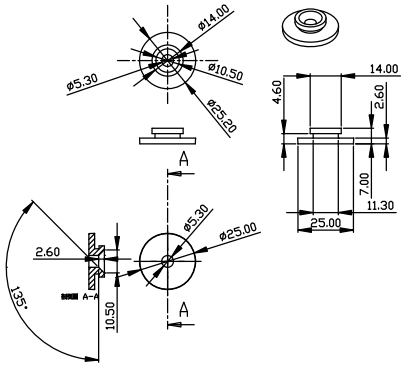

**250-70-0007-00**

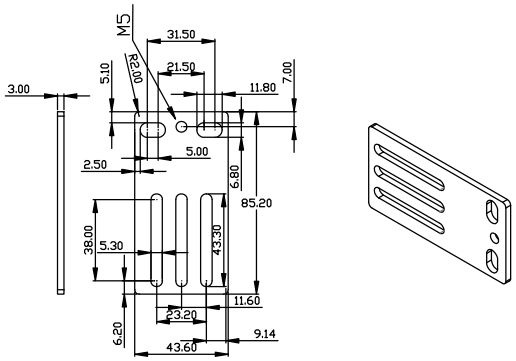

**250-70-0093-00**

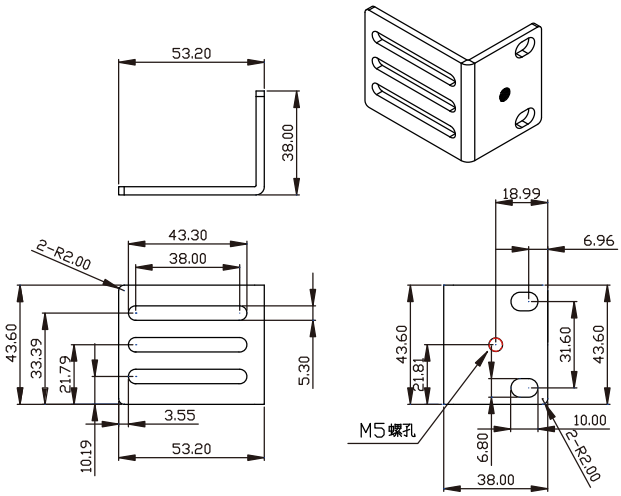

# Technical Specifications / Engineering Submittals

Raritan Model Number: PX3-5528A1V-M5V2

rev20230817

## TRIP CURVE

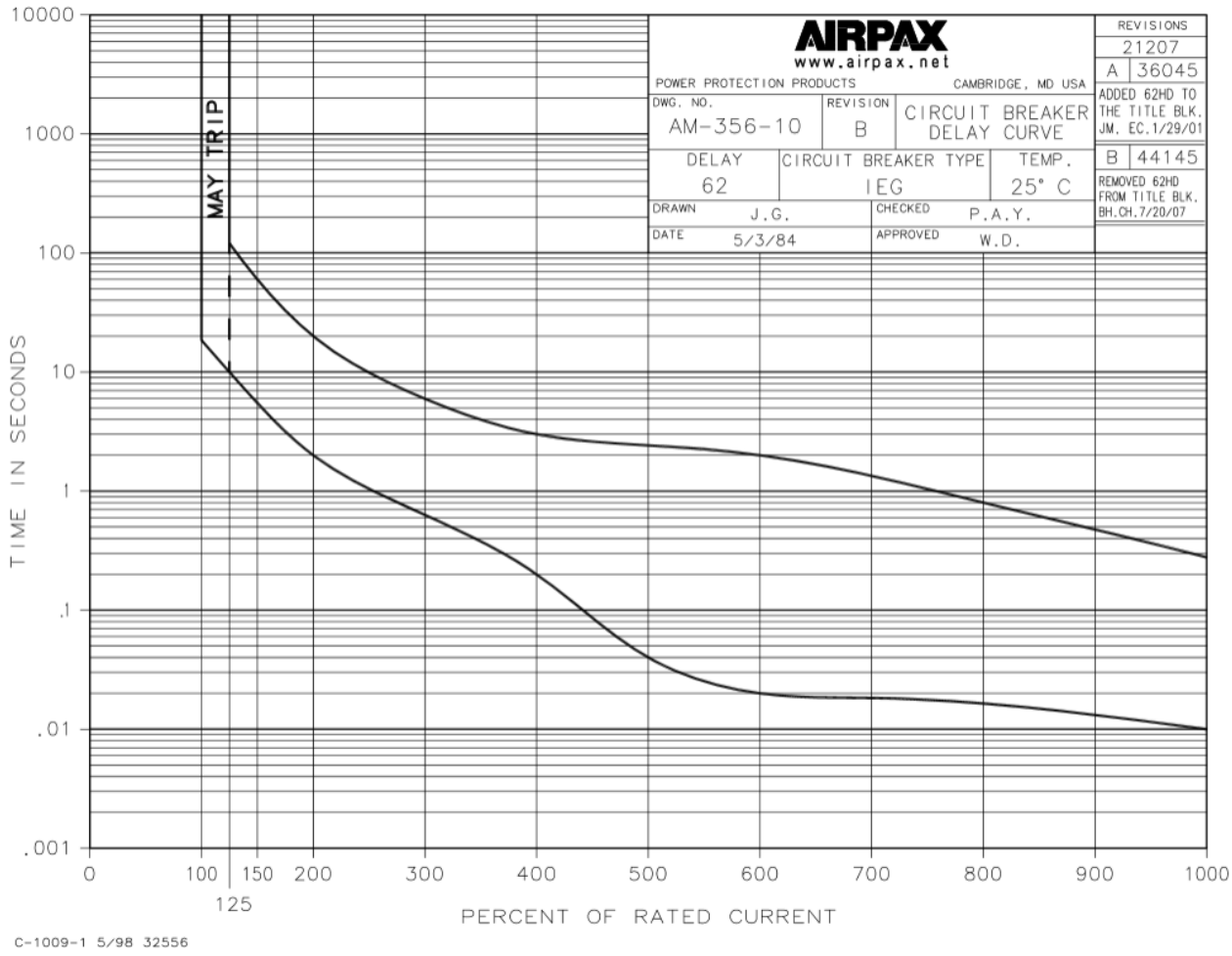


This file generated on: Thu, August 17, 2023 - 01:41:32