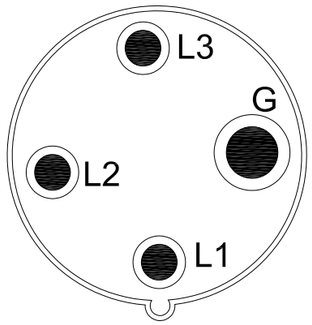

IEC60309 60A 3P

VIEW A

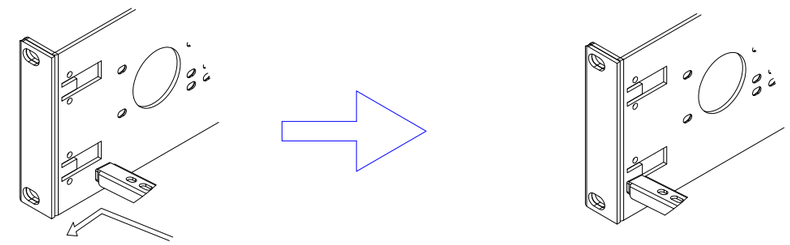

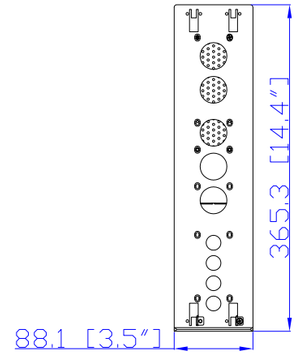

VIEW B

Rear

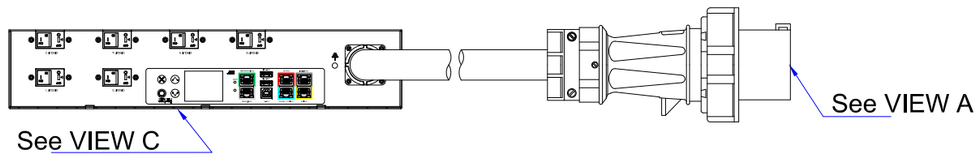

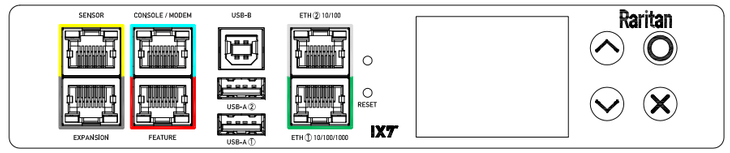

VIEW C

TOP

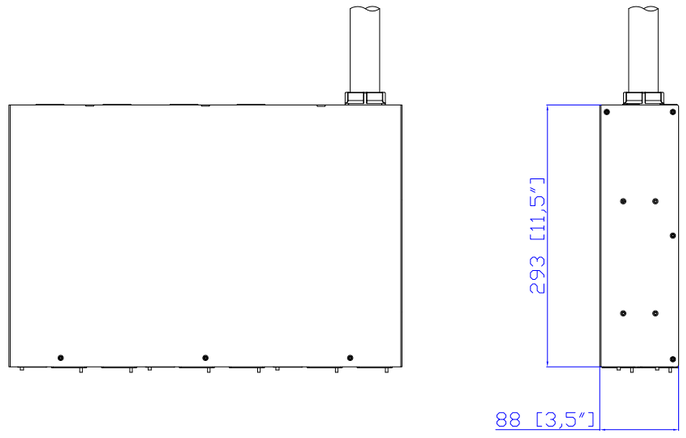

Front

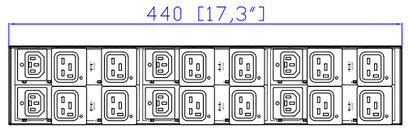

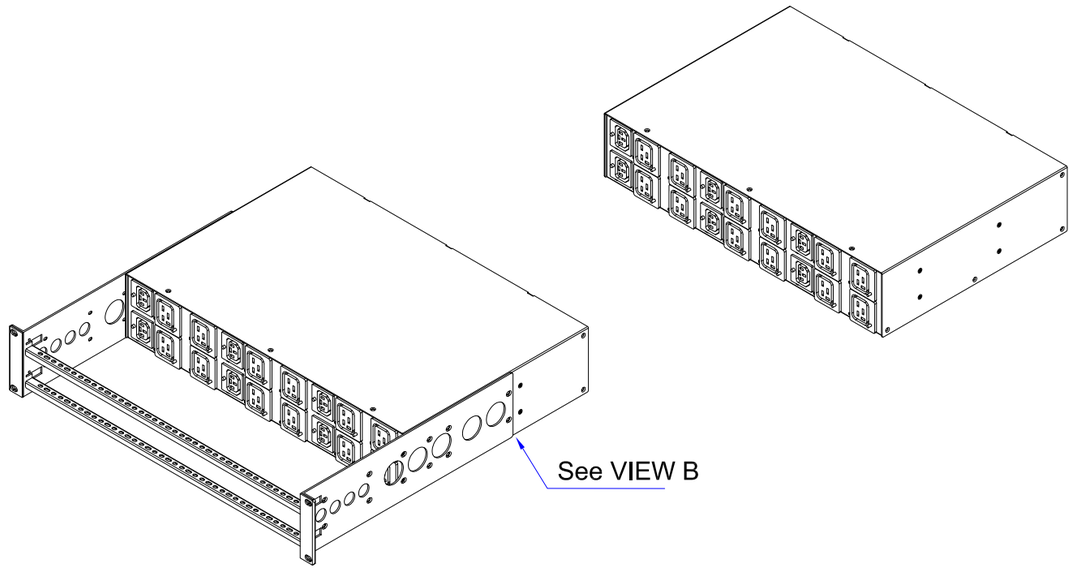

NOTES:

1. INSTALLATION SHALL COMPLY WITH ALL APPLICABLE NATIONAL, STATE AND LOCAL CODES.
2. PLEASE REFER TO PRODUCT DOCUMENTATION FOR FURTHER INFORMATION.
3. UNLESS OTHERWISE SPECIFIED, ALL DIMENSIONS ARE IN MILLITERS [INCHES].
4. MOUNTING BUTTON IS AN ALTERNATIVE MOUNTING METHOD TO THE TOOLESS MOUNT FOR 3RD PARTY ENCLOSURE. BUTTON IS PROVIDED WITH THE UNIT. DETAILED INSTALLATION INSTRUCTIONS CAN BE FOUND IN THE PROVIDED MANUAL.
5. BRACKET KITS TO MOUNT TO SPECIFIC 3RD PARTY ENCLOSURES ARE AVAILABLE AS OPTIONS.
6. LENGTH OF THE CORD IS 3000MM+/-70MM
7. DIMENSION TOLERANCE: LENGTH +/-3MM, WIDTH +/-1MM, DEPTH +/-0.5MM
8. REFER TO THE TABLE FOR DETAIL CORD LENGTH DEFINITION

Raritan
A brand of legrand

Drawing Maker:	EVA LIN	Aug. 28, 2017
Design Engineer:	Siang_H	Aug. 28, 2017
Approver:	Tom_H	Aug. 28, 2017

PROJECTION THIRD ANGLE

DO NOT SCALE DRAWING

SHEET 1 OF 1

THIS DRAWING AND SPECIFICATIONS HEREIN ARE THE PROPERTY OF RARITAN, Inc. AND SHALL NOT BE COPIED, REPRODUCED OR USED, IN WHOLE OR IN PART, AS THE BASIS FOR THE MANUFACTURE OR SALE OF ITEMS WITHOUT WRITTEN PERMISSION FROM RARITAN, Inc. THIS DRAWING IS BASED UPON LATEST AVAILABLE INFORMATION AND IS SUBJECT TO CHANGE WITHOUT NOTICE.

TITLE: iPDU Two U
Three Phase, 48A/208-240V
Plug Type: IEC60309 60A 3P
Outlet Type: C13 (6), C19 (12)

DWG NO. MPX3-5541R-E2 M5 & MPX3-4541R-E2 M5

MODEL NO. PX3-5541R-E2 & PX3-4541R-E2
PX3-5541R-E2M5 & PX3-4541R-E2M5

REV. 2A