**PX3-5747I2U-O1V2**
415V, 3Φ Wye
48A, 34.5kVA

# Technical Specifications / Engineering Submittals

Raritan Model Number: PX3-5747I2U-O1V2

rev20230817

## LINE DRAWING

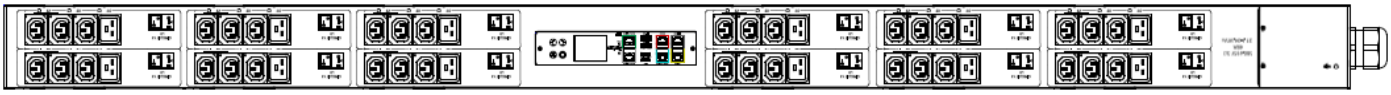

## FEATURES

| | |
|---|---|
| **Energy Metering** | Voltage (V), Current (A), Active Power (kW), Real Power (kVA), Energy (kWh), Power Factor |
| **Metering Accuracy** | ISO/IEC 62053-21 1% (see page 3 for details) |
| **Metering per Input Line** | Yes |
| **Metering per Branch Circuit Breaker** | Yes |
| **Metering per Output Receptacle** | Yes |
| **Remote Outlet Switching** | Yes |
| **Environmental Sensor Ready** | Yes |
| **Replaceable Controller** | Yes |
| **Compatible Sensors** | Temperature, Humidity, Air Flow, Differential Pressure, Water Leak, and Contact Closure |
| **Networking** | Gigabit (10/100/1000 BaseT) Ethernet port; secondary, redundant (10/100/1000 BaseT) Ethernet port. Optional WiFi (802.11a/b/g/n) |
| **Remote Management** | HTTP(s); SSH; Telnet; RS-232 (Serial); Power IQ; SNMP version v2/v3; SMTP; JSON-RPC; Modbus over TCP |
| **Cascading** | Yes, Max 16 PDUs can be daisy chained using a single Ethernet or USB connection |
| **Onboard Display** | Color, matrix LCD display : Voltage, current, or active power (per line, per breaker, or per receptacle / outlet); Alarms; Configuration information (name, ratings, IP / Networking information); Auto-flip orientation |
| **Embedded Processor** | ARM Cortex A5 536MHZ (Atmel A5D35A), 16MB SPI Flash, 64MB DDR2 RAM |

Raritan
A brand of legrand

# Technical Specifications / Engineering Submittals

Raritan Model Number: PX3-5747I2U-O1V2

rev20230817

## INPUT

| | |
|---|---|
| Input Plug | IEC 60309 3P+N+E 6h 60A (4P5W) |
| Cord Length | 3 meters (9.84 feet) standard |
| Cord Entry | Top-end feed |
| Cable Type | IP44("splashproof") |
| Number of Power Cords | 1 |
| Maximum Input Current | 60A |
| Nominal Input Voltage | 415V 3 phase |
| Rated Input Voltage | 380 - 415V 3 phase |
| Input Frequency | 50/60Hz |
| Power Capacity | 31.6kVA at 380V, 34.5kVA at 415V |

## OUTPUT

| | |
|---|---|
| Nominal Output Voltage | 230V |
| Rated Output Voltage | 220 - 240V |
| Receptacles (Output Connections) | (36) IEC320 C13, 12A<br>(12) IEC320 C19, 16A |
| Securelock Support | Yes |
| Cord Retention | Yes |
| Overload Protection | (12) LEJBX6-20 |

## PHYSICAL

| | |
|---|---|
| Color | Black powder coat (custom colors available) |
| Unit Dimensions (WxDxH) | 4.3" x 3.1" x 70.1" ; 109mm x 80mm x 1780mm |
| Unit Weight | TBD |
| Shipping Weight | TBD |
| Shipping Dimensions (WxDxH) | 14.57" x 6.3" x 83.07" ; 370mm x 160mm x 2110mm |
| Mounting | Tool-less button mount |

# Technical Specifications / Engineering Submittals

Raritan Model Number: PX3-5747I2U-O1V2

rev20230817

## ENVIRONMENTAL

| | |
|---|---|
| Operating Temperature | 60°C |
| Operating Relative Humidity | 85% |
| Operating Elevation | 0-10000ft |

## CONFORMANCE

| | |
|---|---|
| Regulatory Approvals | UL Listed, Canada ICES-003, Part 15 Class A of the FCC rules, RoHS compliant |
| Warranty | Standard 2 years manufacturer warranty |

## ACCURACY

| | Input Measurement | Output Measurement |
|---|---|---|
| LCD & GUI Current | ±1% at 0.1 A resolution | ±1% at 0.1 A resolution |
| Voltage | ±1% at 0.1 V resolution | ±1% at 0.1 V resolution |
| Active Power | ±1% at 1 W resolution | ±1% at 1 W resolution |
| Apparent Power | ±1% at 1 VA resolution | ±1% at 1 VA resolution |
| Power Factor | ±1% at 0.1 resolution | ±1% at 0.1 resolution |
| Active Energy | ±1% at 0.1 kWh resolution | ±1% at 0.1 kWh resolution |
| Branch Measurement | | |
| Current | ±1% at 0.1 A resolution | |

# Technical Specifications / Engineering Submittals

Raritan Model Number: PX3-5747I2U-O1V2

rev20230817

## CONTROL PANEL

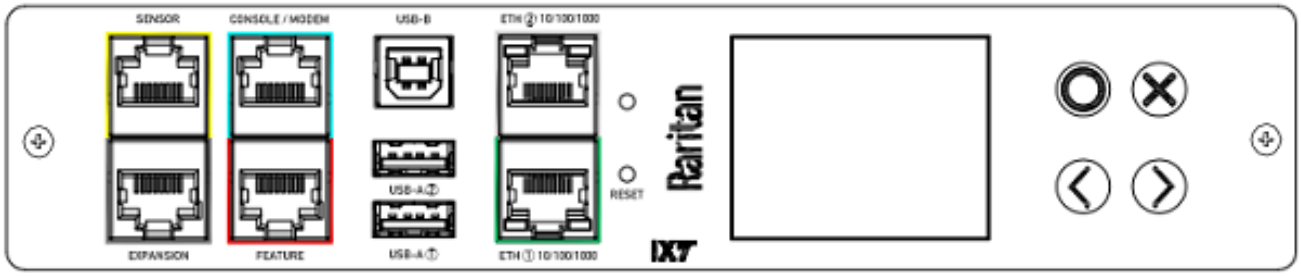

# Technical Specifications / Engineering Submittals

Raritan Model Number: PX3-5747I2U-O1V2

rev20230817

## ELECTRICAL (ONE LINE) DIAGRAM

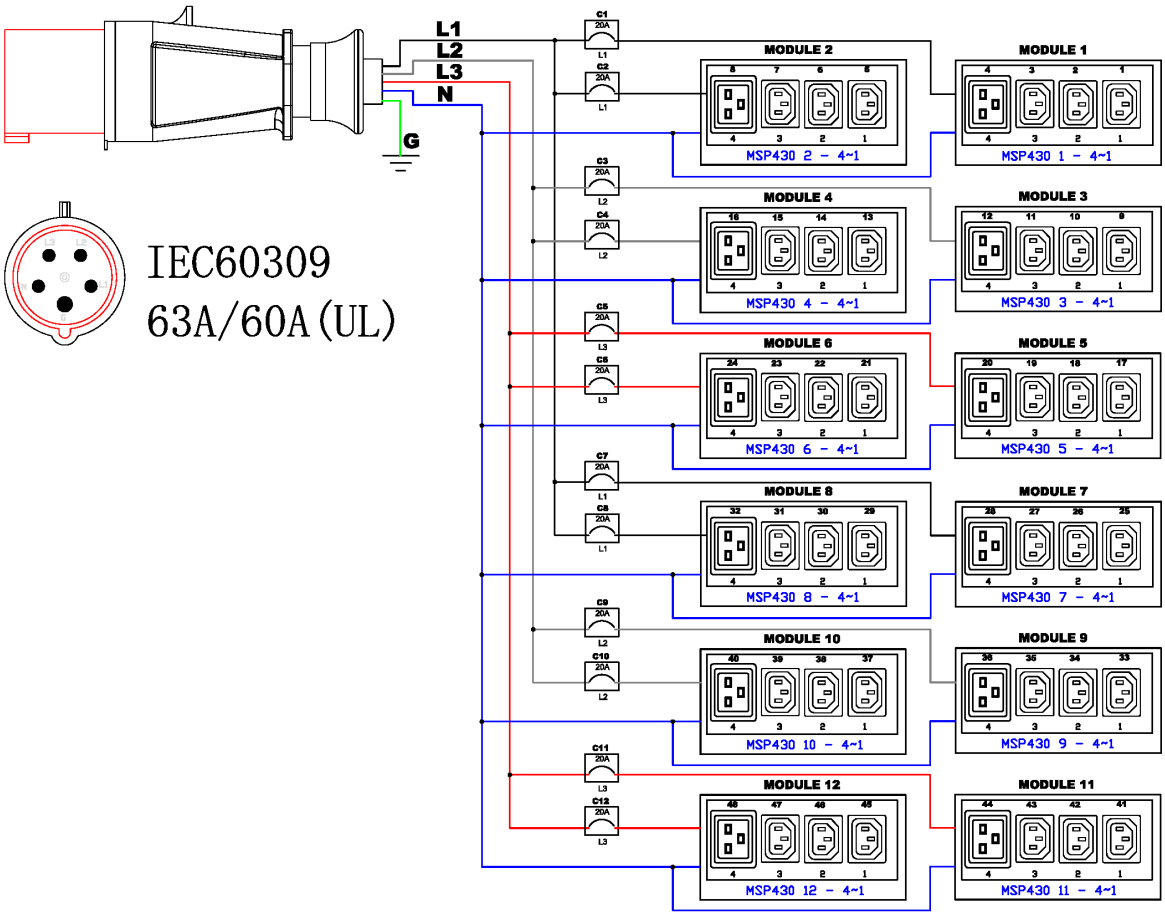

# Technical Specifications / Engineering Submittals

Raritan Model Number: PX3-5747I2U-O1V2

rev20230817

## MECHANICAL DIAGRAM

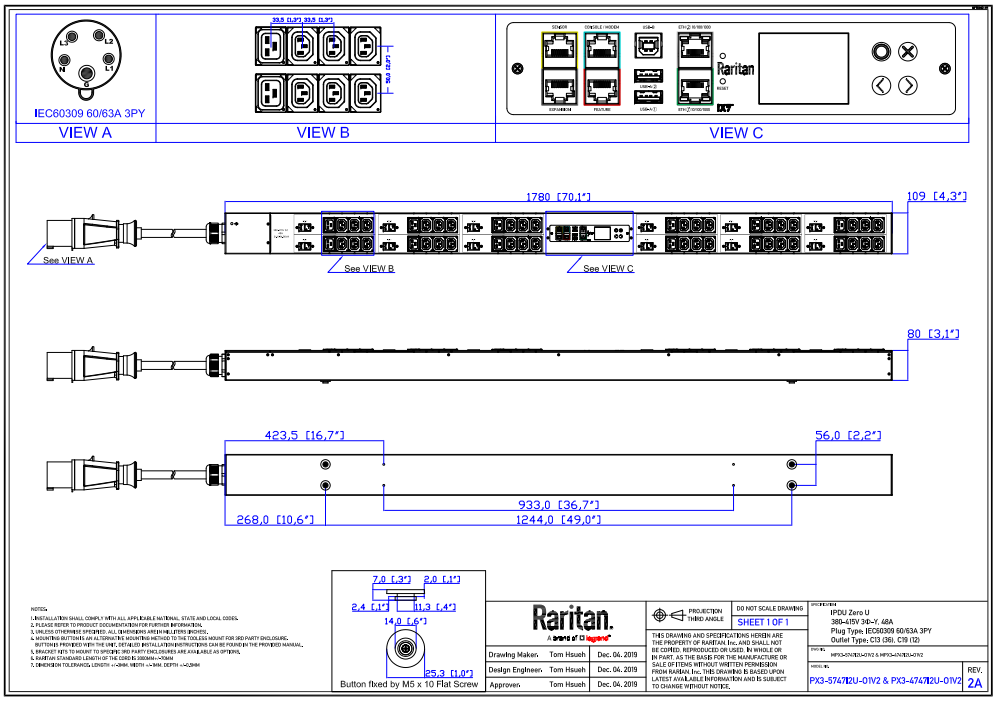

# Technical Specifications / Engineering Submittals

Raritan Model Number: PX3-5747I2U-O1V2

rev20230817

## TRIP CURVE

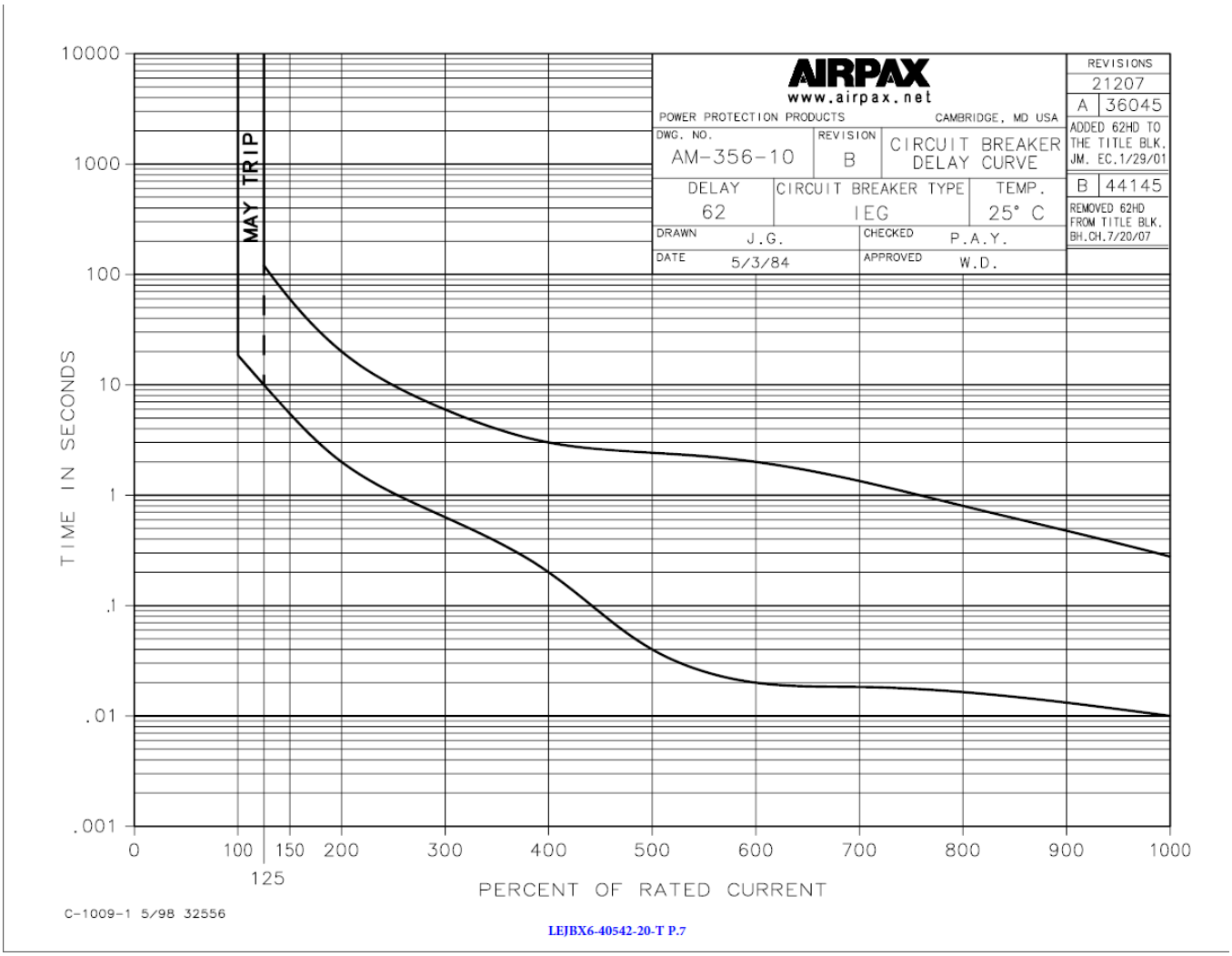


This file generated on: Thu, August 17, 2023 - 01:52:15